New DPX^3

Precise protection and measurement

legrand®

The new DPX³ range of MCCBs is one of the Legrand solutions for providing improved protection and control for all your low voltage installations.

DPX³ is the ideal solution if you are looking for reliable, safe and precise protection for people and property, good continuity of service, easy installation, freedom of layout and easy maintenance and adjustment. The technological innovations incorporated in the product provide you with improved remote control and easy access to the electrical parameters or the energy consumption in your installation.

In this document you will learn about the numerous advantages of the DPX³/DPX range, which is suitable for all your requirements in terms of selecting, designing or creating electrical panels.

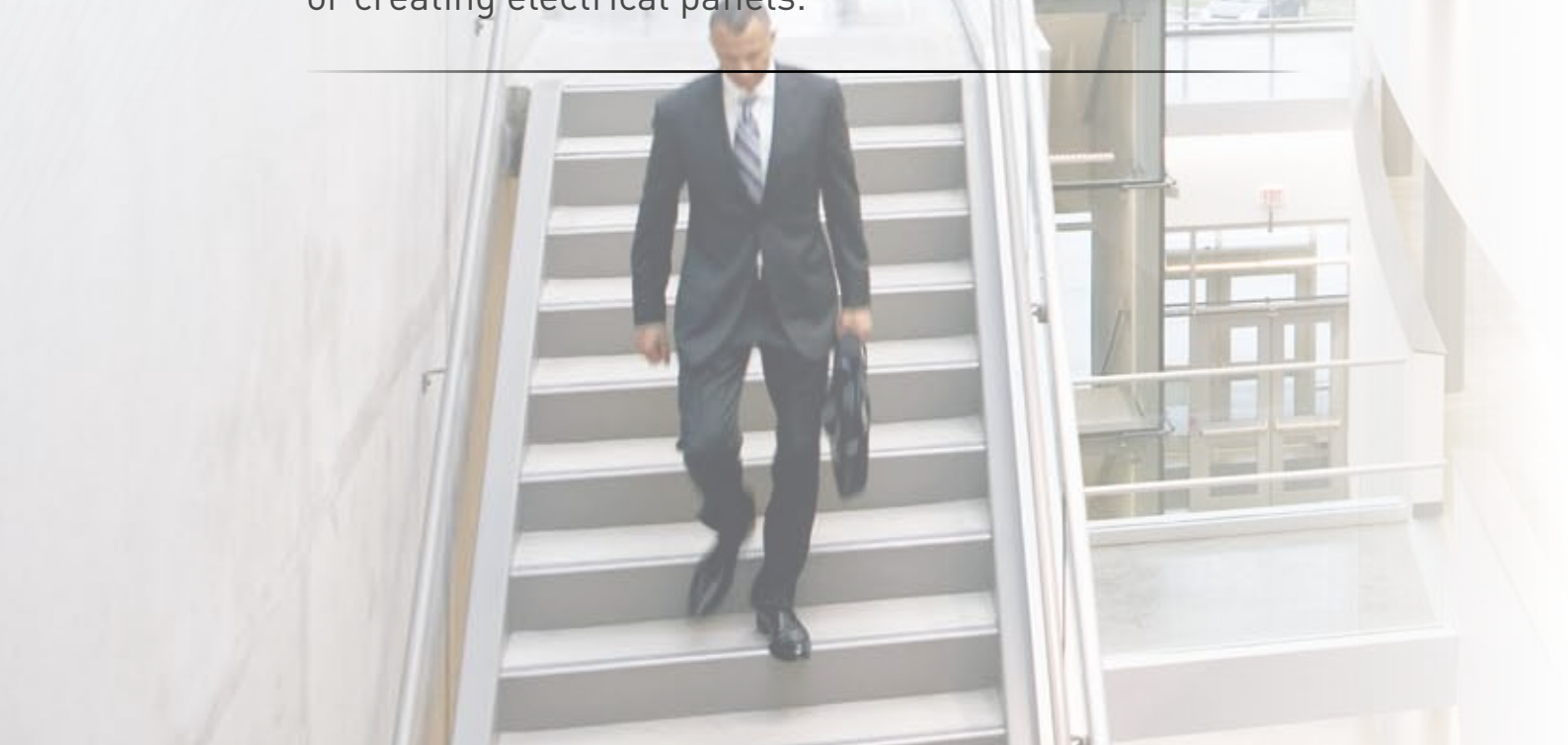

Pages 02-09

WIDE CHOICE, HIGH PERFORMANCE AND SAFETY

02-03 | A complete range for all requirements from 16 to 1 600 A

04-05 | DPX³, an optimised range

06-07 | Reliable and precise protection

08-09 | Continuity of service

Pages 10-13

NEW FUNCTIONS SIMPLIFYING THE USE

10-11 | Easy operation and maintenance

12-13 | A complete range of accessories

Pages 14-15

SIMPLE AND QUICK INSTALLATION

14-15 | Installation of auxiliaries and connection

Pages 24-75

CATALOGUE PAGES

18-23 | DPX³ 160 and DPX³ 250

24-25 | DPX³ 160 and DPX³ 250 accessories

26-39 | DPX 250, DPX 630 and DPX 1600

40-41 | Ekinoxe MCCB DBs for DPX³

42-49 | DPX³ and DPX dimensions

50-69 | DPX³ and DPX technical characteristics

70-75 | DPX Automatic Transfer Switch

A COMPLETE RANGE FOR ALL YOUR REQUIREMENTS FROM 16 TO 1600 A

DPX³/DPX: 5 sizes of moulded case circuit breakers

Breaking capacity ranging from 16 to 100 kA.

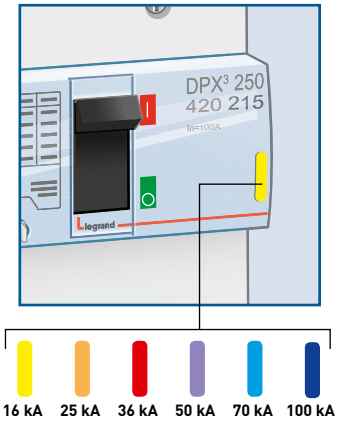

Easy identification of the breaking capacity: colour marking

DPX³ 160

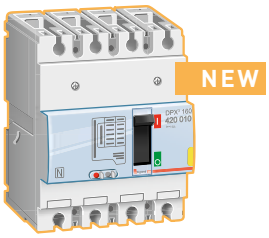

DPX³ 250

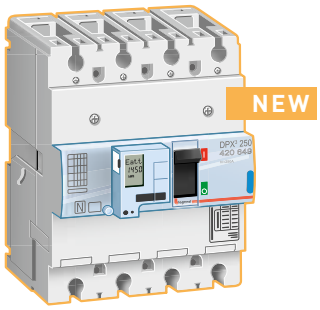

MOUNTING		ON RAIL ⊥⊔ OR ON PLATE				ON RAIL ⊥⊔ OR ON PLATE			
Rated current In	Thermal magnetic release	From 16 to 160 A				From 100 to 250 A			
	Microprocessor release	-				From 40 to 250 A			
Ultimate breaking capacity Icu (1)	380/415 V∿	16 kA	25 kA	36 kA	50 kA	25 kA	36 kA	50 kA	70 kA
	220/240 V∿	25 kA	35 kA	50 kA	65 kA	40 kA	60 kA	100 kA	100 kA
Service breaking capacity Ics (% Icu)		100 %	100 %	100 %	100 %	100 %	100 %	100 %	100 %
Electronic earth leakage module		Integrated				Integrated			

(1) EN 60947-2 and IEC 60947-2

DPX 250

DPX 630

DPX 1250/1600

ON PLATE			ON PLATE			ON PLATE		ON PLATE	
From 40 to 250 A		From 100 to 250 A	From 320 to 630 A		From 400 to 630 A	From 800 to 1 250 A		-	
From 40 to 250 A		-	From 250 to 630 A		-	-		From 800 to 1 600 A	
36 kA	70 kA	100 kA	36 kA	70 kA	100 kA	36 kA	70 kA	50 kA	70 kA
60 kA	100 kA	170 kA	60 kA	100 kA	170 kA	80 kA	100 kA	80 kA	100 kA
100 %	75 %	50 %	100 %	75 %	50 %	100 %	75 %	100 %	75 %
Downstream			Downstream			Earth leakage relay and toroid coil			

DPX³, AN OPTIMISED RANGE

The same depth for all circuit breakers from 16 to 250 A

With 2 new ratings (80 and 200 A), a wide range of versions, characteristics and innovative functions, Legrand has an even more comprehensive range with just two sizes of circuit breakers.

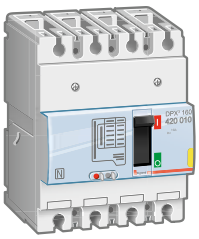

Thermal-magnetic DPX³ 160

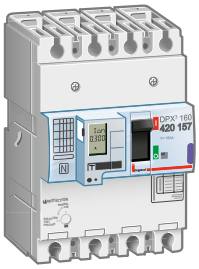

Thermal-magnetic DPX³ 160 with integrated earth leakage module

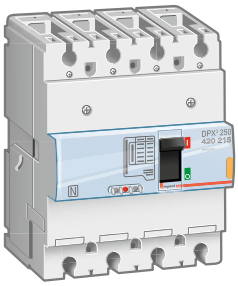

Thermal-magnetic DPX³ 250

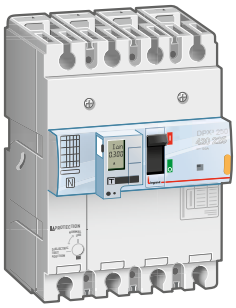

Thermal-magnetic DPX³ 250 with integrated earth leakage module

A complete range satisfying your requirements

		DPX³ 160								DPX³ 250				
Nominal current In (A)		16	25	40	63	80	100	125	160	40	100	160	200	250
Number of poles	3	✓	✓	✓	✓	✓	✓	✓	✓	✓	✓	✓	✓	✓
	4	✓	✓	✓	✓	✓	✓	✓	✓	✓	✓	✓	✓	✓
Versions	Fixed	✓	✓	✓	✓	✓	✓	✓	✓	✓	✓	✓	✓	✓
	Plug-in	✓	✓	✓	✓	✓	✓	✓	✓	✓	✓	✓	✓	✓
Release	Thermal-magnetic	✓	✓	✓	✓	✓	✓	✓	✓		✓	✓	✓	✓
	Microprocessor									✓	✓	✓		✓
Options	Earth leakage protection	✓	✓	✓	✓	✓	✓	✓	✓	✓	✓	✓	✓	✓
	Measurement									✓	✓	✓		✓
	Earth fault protection									✓	✓	✓		✓
Ultimate breaking capacity Icu (kA)	16	✓	✓	✓	✓	✓	✓	✓	✓					
	25	✓	✓	✓	✓	✓	✓	✓	✓	✓	✓	✓	✓	✓
	36	✓	✓	✓	✓	✓	✓	✓	✓	✓	✓	✓	✓	✓
	50	✓	✓	✓	✓	✓	✓	✓	✓	✓	✓	✓	✓	✓
	70									✓	✓	✓	✓	✓

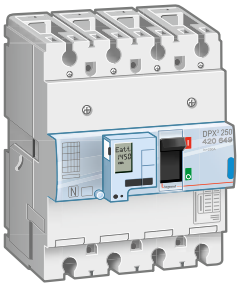

Microprocessor DPX³ 250

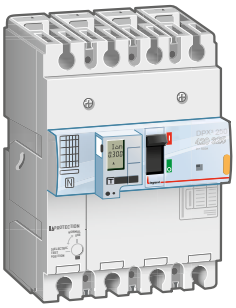

Microprocessor DPX³ 250
with integrated earth leakage module

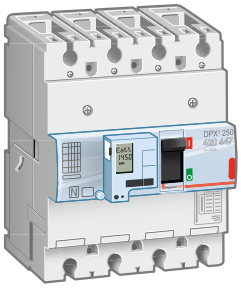

Microprocessor DPX³ 250
with integrated measuring units

Microprocessor DPX³ 250
with integrated earth leakage module and integrated measuring units

Optimised dimensions

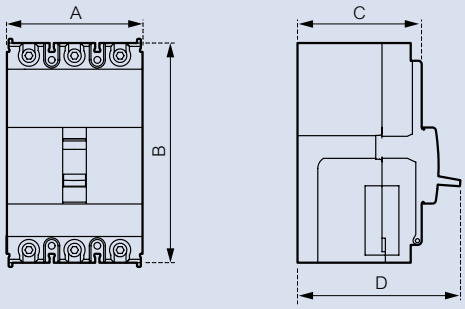

DIMENSIONS (mm)		DPX³ 160	DPX³ 250
A	3P	81	105
	4P	108	140
B	Without ELM	130	165
	With ELM	160	195
C		74	
D		100	

THE SAME DEPTH FOR ALL RATINGS

Optimised integration: devices with different ratings can be used together on the same row.

Interlocking of 2 MCCBs of different ratings.

RELIABLE AND PRECISE PROTECTION

To comply with all requirements for the protection of people and property, the new DPX³ MCCBs and integrated earth leakage DPX³ MCCBs are available in thermal-magnetic versions from 16 to 250 A and microprocessor versions from 40 to 250 A.

Thermal-magnetic MCCBs
DPX³ 160 and DPX³ 250

The thermal trip threshold Ir on all these devices can be adjusted to provide the best protection against overloads.

On the DPX³ 250 the magnetic trip threshold Ii can also be adjusted, for precise protection against short-circuits.
This threshold is fixed on the DPX³ 160.

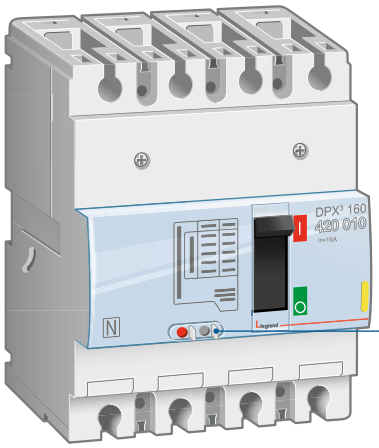

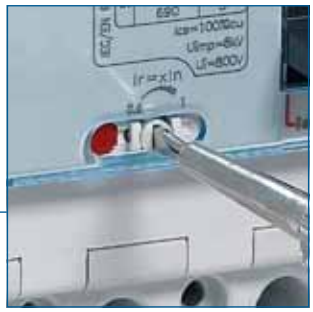

Thermal-magnetic MCCBs are adjusted on the front panel using a screwdriver

THERMAL-MAGNETIC RELEASES	DPX³ 160		DPX³ 250	
Thermal protection against overloads Ir (A)	Adjustable: 0.8 to 1 x In	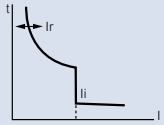	Adjustable: 0.8 to 1 x In	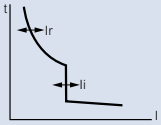
Magnetic protection against short circuits Ii (A)	Fixed 16 A: 400 A 25 A: 400 A 40 to 160A: 10 x In		Adjustable: 5 to 10 x In	

Microprocessor MCCBs
DPX³ 250

Microprocessor releases provide very precise adjustment of the trip thresholds Ir and Isd and the response times Tr and Tsd.

On MCCBs with protection against earth faults Isg and Tsg can be adjusted.

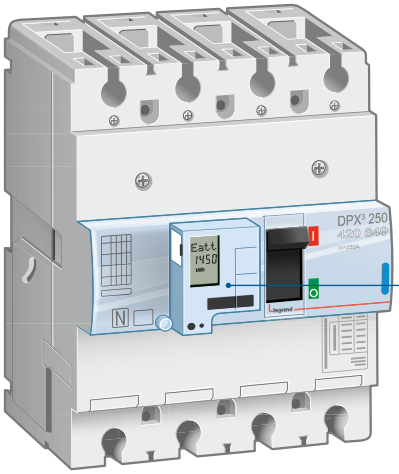

Adjustments are made using the selector switch and are displayed on the LCD screen

MICROPROCESSOR RELEASES		DPX³ 250		
Long delay protection against overloads	Threshold Ir (A)	Adjustable	0.4 to 1 x In	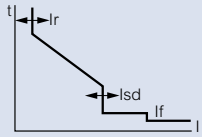
	Response time Tr (s)		3 to 15 s	
Short delay protection against short circuits	Threshold Isd (A)	Adjustable	1.5 to 10 x Ir	
	Response time Tsd (s)		0.01 to 0.5 s	
Protection against earth faults	Threshold Ig (A)	Adjustable	0.2 to 1 x In, Off	
	Response time Tg (s)		0.1 to 1 s	

DPX³ 160 and DPX³ 250 MCCB
with Integrated earth leakage module

Precise protection of people is provided on all integrated earth leakage DPX³ MCCBs (thermal-magnetic and microprocessor) by an integrated microprocessor unit. Adjustments are made via an LCD screen.

EARTH LEAKAGE PROTECTION	DPX³ 160/250
Trip threshold IΔn (A)	0.03 - 0.3 - 1 - 3
Response time Δt (s)	0 - 0.3 - 1 - 3

ADVANTAGES OF THE MICROPROCESSOR RELEASE:

- RS485 communication function
- Self-diagnostic function
- More precise adjustments
- Event log
- Optional measurement unit.

CONTINUITY OF SERVICE

Selectivity of DMX³, DPX³ and DPX MCCBs

Selectivity consists of coordinating the protection in such a way that a fault on one circuit only trips the protection placed directly upstream of the fault, thus avoiding the rest of the installation being put out of service.

Legrand circuit breakers are the ideal answer for total selectivity, providing 4 types of coordination: current sensing, time, dynamic and logical.

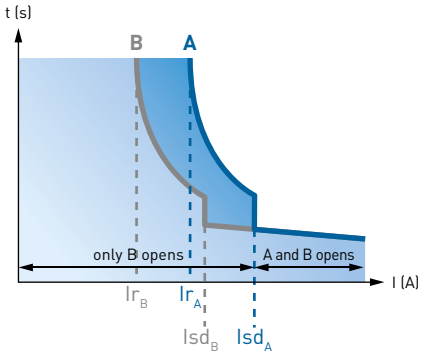

Current sensing selectivity
Choice of the current rating to ensure selectivity

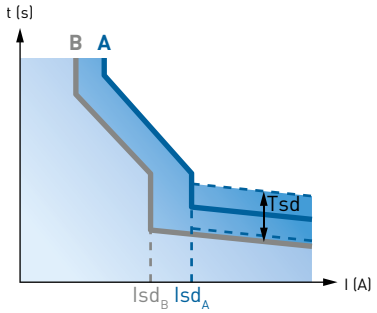

Time selectivity
Choice of the current setting on a circuit breaker to space out the trips over time

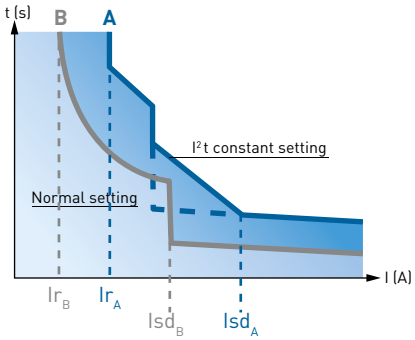

Dynamic selectivity
High and low microprocessor adjustment of the upstream and downstream circuit breakers

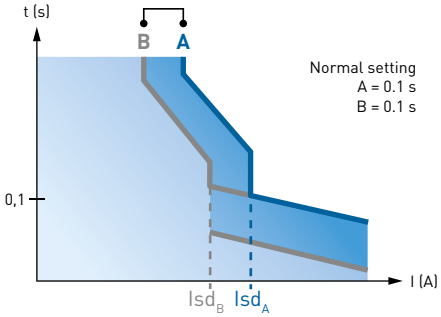

Logical selectivity
Communication between the circuit breakers to adjust the tripping to the actual operating requirements

DPX³ 160 and 250 supply invertors

Supply inversion switches the power supply of the installation to a backup supply when there is a fault on the main supply.

The DPX³ interlocking device greatly simplifies installing the supply inverter:
- Front mounting
- Compact size
- No adjustments required
- Ability to use a DPX³ 160 and a DPX³ 250 together
- Rail mounted, enabling installation in small cabinets
- Just 2 catalogue numbers covering all DPX³, whatever the size: one for fixed versions, one for plug-in versions.

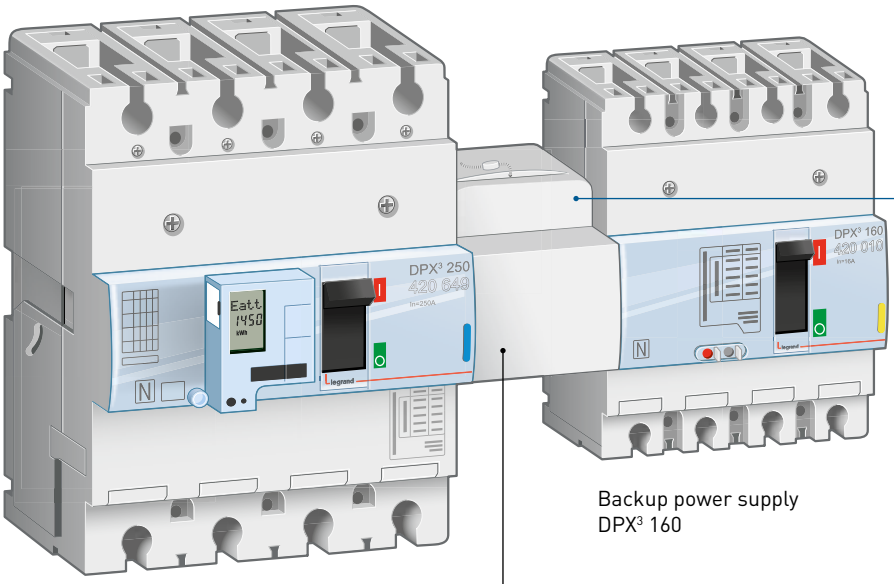

Easy to install: mounting on front panel with no adjustment

MOTORISED SUPPLY INVERSION FOR CONTINUOUS OPERATION

Combined with an automated control unit, supply inversion can be controlled locally or even remotely by supervision.

EASY OPERATION AND MAINTENANCE

Integrated measuring units on microprocessor DPX³ 250

The new DPX³ 250 microprocessor MCCBs with integrated measurement functions provide access to the parameters of the installation in a compact unit.

The measured values can be viewed:
- Directly on the electrical panel, on the LCD screen on the front panel of the device
- Remotely using a PC equipped with software, via the RS485 communication interface and the Modbus protocol or through a web-enabled smartphone.

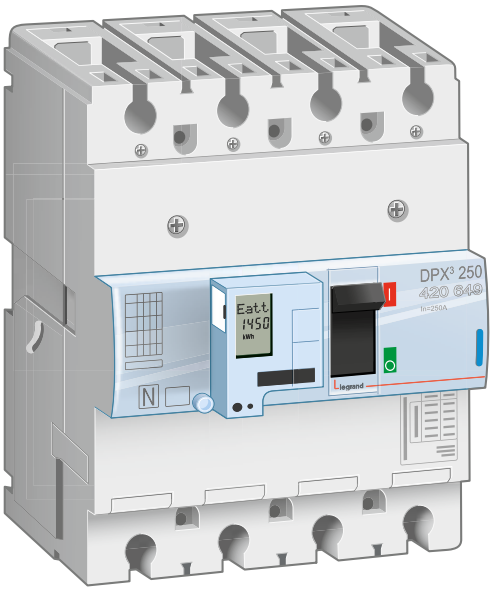

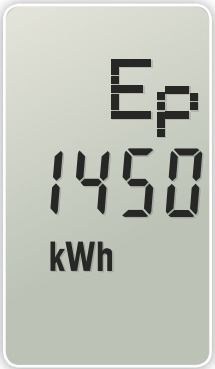

Display of values in real time and logs:
- **Consumption**
- **Current**
- **Voltage**
- **Active/reactive power**
- **Harmonics**
- **Frequency**

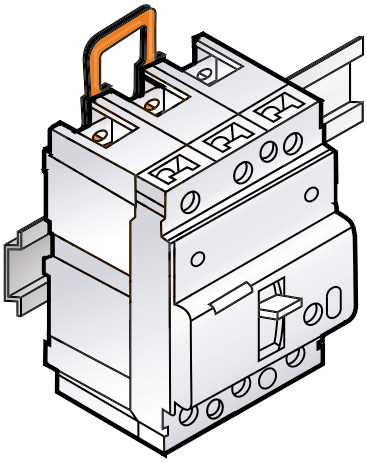

The new range of DPX³ MCCBs can be mounted on DIN Rail and offer ease of operation and maintenance.

DISPLAY AND MEASURE

Display of measured values on a PC equipped with software.

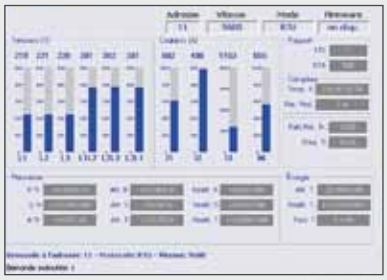

Plug-in DPX³ 160 and DPX³ 250

Replacing a plug-in device only takes a few minutes and can be done without switching off the power supply to the other circuits.

All the devices in the DPX³ range can can be converted to plug-in versions. The bases are supplied with all the necessary components to convert the devices. They are mounted on plates and can be connected via front or rear terminals.

Specific accessories are available as options to ensure the safety of testing and maintenance operations.

With the optional connector the power can be disconnected while the auxiliaries are kept operational for tests

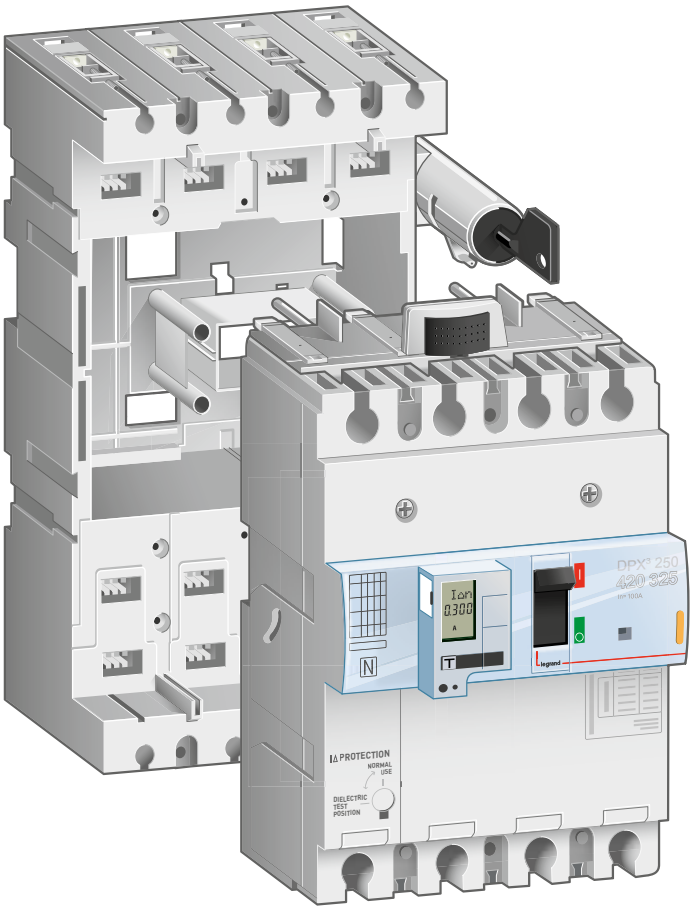

The top and bottom handles enable the device to be extracted easily

Locking via key or padlock prevents the device being switched on, on its base, during maintenance operations

A COMPLETE RANGE OF ACCESSORIES

Motorised control for DPX³ 160 and 250

Motorised controls for the DPX³ 160 and 250 enable devices to be tripped and reset remotely to provide a simple answer to operating requirements.
They are available in just **2 catalogue numbers** for all the DPX³, one with a **side** control and one with a **front** control. They take a wide range of AC and DC supply voltages.

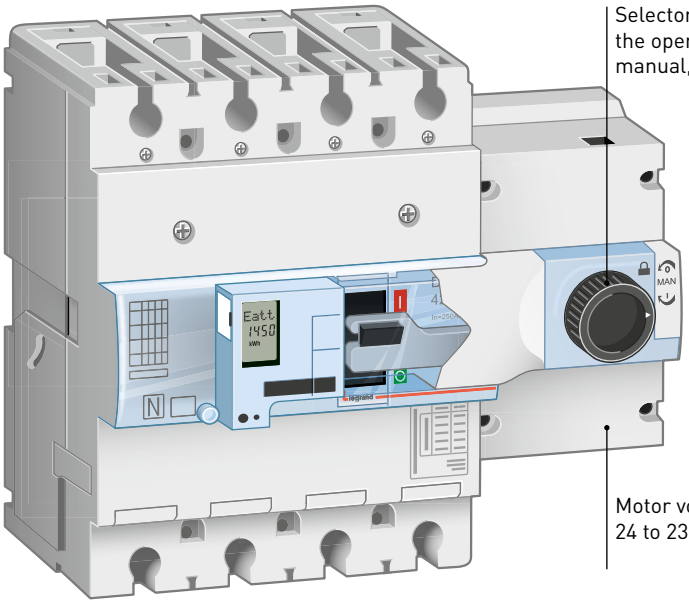

The operating key
is always available for periodic tests or for manual control

The front motorised control
leaves access to the connections and adjustment

The side motorised control
is mounted on the rail beside the DPX³

REMOTE DISPLAY OF PARAMETERS:

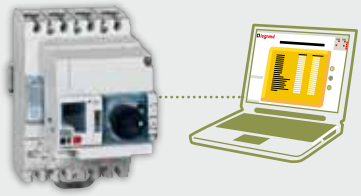

Remote display on a PC equipped with software.

Direct and vari-depth rotary handle for DPX³ 160 and 250

Direct or vari-depth rotary handle provides **the utmost convenience**.
They can be **locked using padlocks or keys** to ensure the safety of maintenance operations.

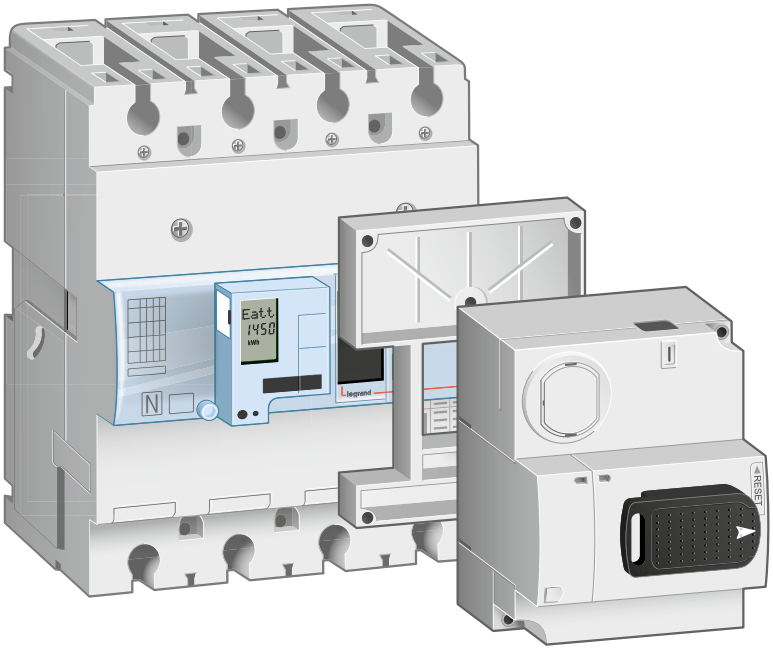

Direct rotary handle
can take a lock with key

The vari-depth rotary handle
enables the control handle to be installed on the door

REMINDER:
The DPX 250, 600 and 1600 keep their own specific accessories:
motorised, rotary and vari-depth controls.

INSTALLATION OF AUXILIARIES AND CONNECTION

Control and signalling auxiliaries
for DPX³ 160 and 250

The shunt trip enables the remote opening of the circuit breaker.

Auxiliary and fault signal contacts are used to control an auxiliary circuit or to feed back the status of the circuit breaker remotely.

The electrical auxiliaries are installed in dedicated locations under the front panel

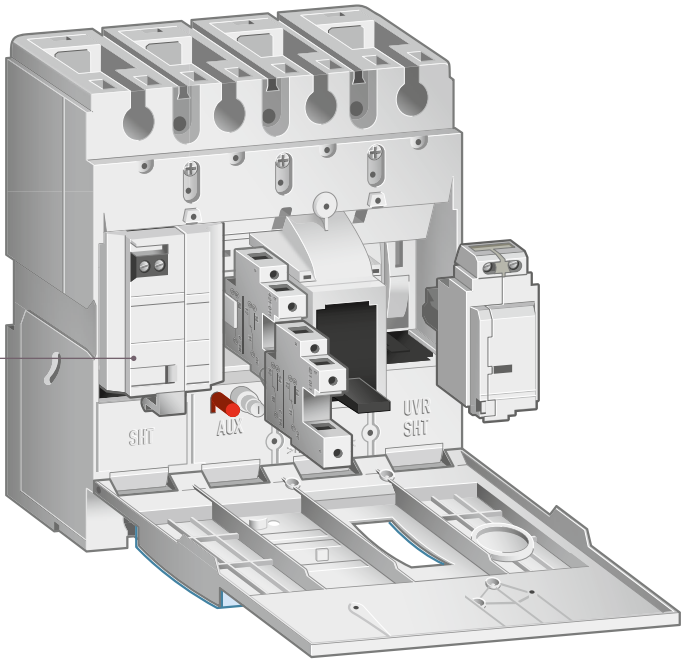

DPX³ have three options for the outgoing connection wires: via the front panel,

...via the side,

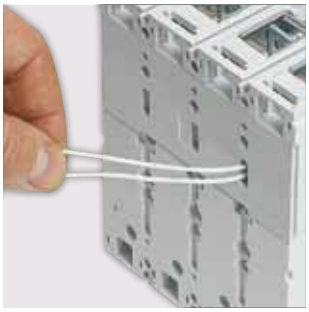

...or via the back

AUXILIARIES COMMON TO THE DPX³ 160 AND 250:

- Auxiliary or fault signal contact
- Shunt trip
- Undervoltage releases

Connecting DPX³ 160 and 250

DPX³ 160 have cage terminals as standard for direct connection via cable or bars.
DPX³ 250 are supplied with plain connection plates for connection via bars or lugs.
They can have cage terminals as an option.

A complete range of connection accessories is also available for all installation configurations.

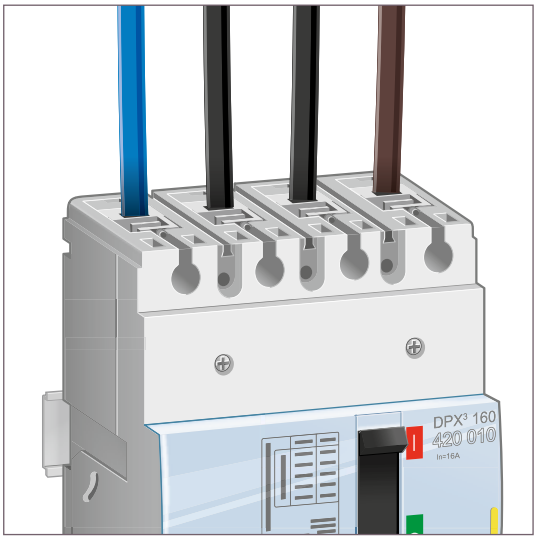

Connecting a DPX³ 160
via cables on integrated cage terminals

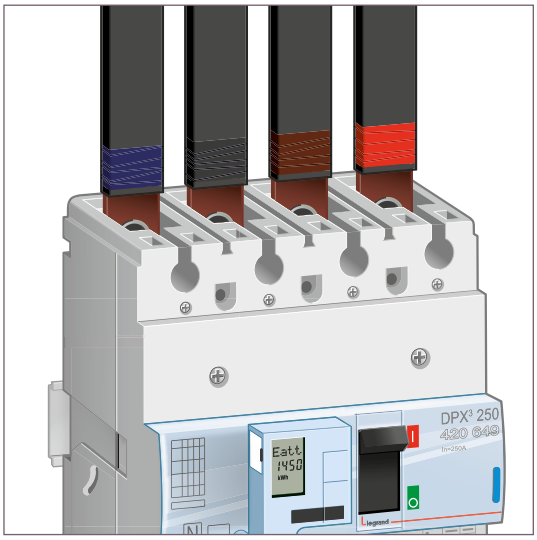

Connecting a DPX³
via flexible bars screwed onto plates

The spreaders enable
connection via large
cross-section cables

The flat rear terminals
are adjustable

The terminal shields provide
IP 20 protection
for the connections

LARGE CAPACITY CAGE TERMINALS

Large capacity cage terminals enable connection via cable up to 150 mm²
(see catalogue pages for more details)

DPX³/DPX™
electrical characteristics

DEVICES	DPX³ 160 thermal magnetic (p. 18-19)				DPX³ 250 thermal magnetic (p. 20)				DPX³ 250 microprocessor release (p. 21-23)				DPX 250 thermal magnetic (p. 26-28)		
Mounting	On rail ⎓ or on plate				On rail ⎓ or on plate				On rail ⎓ or on plate				On plate		
Ultimate breaking capacity Icu (kA) (EN 60947-2 and IEC 60947-2)	**16 kA**	**25 kA**	**36 kA**	**50 kA**	**25 kA**	**36 kA**	**50 kA**	**70 kA**	**25 kA**	**36 kA**	**50 kA**	**70 kA**	**36 kA**	**70 kA**(3)	**100 kA**
380/415 V∿	16	25	36	50	25	36	50	70	25	36	50	70	36	70	100
220/240 V∿	25	35	50	65	40	60	100	100	40	60	100	100	60	100	170
Service breaking capacity Ics (% Icu)	100	100	100	100	100	100	100	100	100	100	100	100	100	75	50
Characteristic of use															
Nominal frequency	50/60 Hz														
Maximum rated operating voltage Ue	690 V (500 V with integrated e.l.m.)				690 V (500 V with integrated e.l.m.)				690 V (500 V with integrated e.l.m.)				690 V∿ - 250 V⎓		
Category of use	A				A				A				A		
Thermal magnetic adjustment															
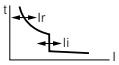 **Thermal**	0.8 to 1 In				0.8 to 1 In				-				0.64 to 1 In		
Magnetic	10 In (400 A for 16 A and 25 A sizes)				5 to 10 In				-				3.5 to 10 In		
Microprocessor protection adjustment															
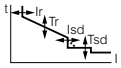	-				-				Ir : 0.4 to 1 In Isd : 1.5 to 10 Ir				-		
Maximum cable cross-section															
Rigid cable	120 mm²				185 mm²				185 mm²				185 mm²		
Flexible cable	95 mm²				150 mm²				150 mm²				150 mm²		
Copper bar and lug width	18 mm				25 mm(1)				25 mm(1)				25 mm		
Tightening torque	8 Nm				10 Nm				10 Nm				15 Nm		
Nominal current (In) at 40 °C (A)															
In (A)	16	25	40	63	80	100	125	160	100	160	200	250	40	100	160	250
Phase	16	25	40	63	80	100	125	160	100	160	200	250	40	100	160	250
N	16	25	40	63	80	100	125	160	100	160	200	250	40	100	160	250
N/2	-	-	-	-	-	-	-	-	-	-	-	-	-	-	-	-
Magnetic threshold (Im) (A)(2) of DPX therminal magnetic	Fixed								Adjustable						
In (A)	16	25	40	63	80	100	125	160	100	160	200	250	-		
Phase	400	400	400	630	800	1000	1250	1600	125-250	200-400	315-630	500-1000	-		
N	400	400	400	630	800	1000	1250	1600	125-250	200-400	315-630	500-1000	-		
N/2	-	-	-	-	-	-	-	-	-	-	-	-	-		

	DPX 250 thermal magnetic (p. 26-28)							
In (A)	40	63	100	160	250	100	160	250
Phase	140 - 400	220 - 630	350 - 1000	560 - 1600	900 - 2500	350 - 1000	560 - 1600	900 - 2500
N	140 - 400	220 - 630	350 - 1000	560 - 1600	900 - 2500	350 - 1000	560 - 1600	900 - 2500
N/2	-	-	-	350 - 1000	560 - 1600	-	350 - 1000	560 - 1600

Endurance (cycles)			
Electrical	8000	8000	8000	8000
Mechanical	25000	20000	20000	20000
Electronic earth leakage module				
Type	Integrated	Integrated	Integrated	downstream e.l.m.

(1) Copper bars only
(2) Trip current for 50/60 Hz. For direct current, multiply by 1.5

	DPX 250 microprocessor release (p. 26-28)		DPX 630 thermal magnetic (p. 29-31)			DPX 630 microprocessor release (p. 29-31)		DPX 1250 thermal magnetic (p. 33)			DPX 1600 microprocessor release (p. 34)	
	On plate		On plate			On plate		On plate			On plate	
	36 kA	70 kA(3)	36 kA	70 kA(3)	100 kA	36 kA	70 kA(3)	50 kA	70 kA(3)	100 kA	50 kA	70 kA(1)(3)
	36	70	36	70	100	36	70	50	70	100	50	70
	60	100	60	100	170	60	100	80	100	170	80	100
	100	75	100	75	50	100	75	100	75	50	100	75
	50/60 Hz											
	690 V∿		690 V∿ - 250 V⎓			690 V∿		690 V∿			690 V∿	
	A		A			A: In 630 A B: In 200 to 400 A		A			B	
	-		0.8 to 1 In			-		0.8 to 1 In			-	
	-		5 to 10 In			-		5 to 10 In			-	
	Ir: 0.4 to 1 In Tr: 5 to 30 s Isd: 1.5 to 10 Ir Tsd: 0 to 0.3 s I^2t = constant Tsd: 0.01 to 0.3 s		-			Ir: 0.4 to 1 In Tr: 5 to 30 s Isd: 1.5 to 10 Ir Tsd: 0 to 0.3 s I^2t = constant Tsd: 0.01 to 0.3 s		-			Ir: 0.4 to 1 In Tr: 5 to 30 s Isd: 1.5 to 10 Ir Tsd: 0 to 0.3 s I^2t = constant Tsd: 0.01 to 0.3 s	
	185 mm²		300 mm² or 2 x 240 mm²			300 mm² or 2 x 240 mm²		2 or 4 x 240 mm²			2 or 4 x 240 mm²	
	150 mm²		240 mm² or 2 x 185 mm²			240 mm² or 2 x 185 mm²		2 or 4 x 185 mm²			2 or 4 x 185 mm²	
	25 mm		32 mm			32 mm		50 mm			50 mm	
	15 Nm		15 Nm					20 Nm				
	40	100	160	250	400	630	400	630	800	1000	1250	630	1000	1250	800	1250	1600
	40	100	160	250	400	630	400	630	800	1000	1250	630	1000	1250	800	1250	1600
	0 - 50 - 100 % of phase value				400	630	0 - 50 - 100 % of phase value		800	1000	1250	630	1000	1250	0 - 50 - 100 % of phase value		
					-	-											
	Adjustable																
	-				400	630	-		800	1000	1250				-		
	-				2000-4000	3150-6300	-		4000 - 8000	5000 - 10000	6250 - 12500				-		
	-				2000-4000	3150-6300	-								-		
	-				-	-	-								-		
	8000				5000		5000		3000						2000		
	20000				15000		15000		10000						10000		
	downstream e.l.m.				downstream e.l.m.		downstream e.l.m.		earth leakage relay & toroid coil								

DPX³ 160 thermal magnetic

NEW

MCCBs from 16 to 160 A

4200 00

4200 10

4200 37

4201 57

Technical characteristics and tripping curves (p. 50-56)
Dimensions (p. 42)

MCCBs for switching, remote tripping and protection of low voltage electrical system
Supplied with cage terminals 70 mm² max. (flexible cable) or 95 mm² max. rigid cable with accessories
Can be fitted with accessories and DPX³ common auxiliaires
Conform to IEC 60947-2

MCCBs

Thermal adjustable from 0.8 to 1 In
Magnetic fixed at 10 In (fixed at 400 A for In 16 A and 25 A)

Pack	Cat.Nos 3P	Cat.Nos 4P	In (A)
			Breaking capacity Icu 16 kA (400 V∿)
1	4200 00	4200 10	16
1	**4200 01**	4200 11	25
1	**4200 02**	**4200 12**	40
1	**4200 03**	**4200 13**	63
1	**4200 04**	**4200 14**	80
1	**4200 05**	**4200 15**	100
1	**4200 06**	**4200 16**	125
1	4200 07	4200 17	160
			Breaking capacity Icu 25 kA (400 V∿)
1	4200 40	4200 50	16
1	**4200 41**	4200 51	25
1	**4200 42**	**4200 52**	40
1	**4200 43**	**4200 53**	63
1	**4200 44**	4200 54	80
1	**4200 45**	**4200 55**	100
1	**4200 46**	**4200 56**	125
1	4200 47	4200 57	160
			Breaking capacity Icu 36 kA (400 V∿)
1	4200 80	4200 90	16
1	4200 81	4200 91	25
1	4200 82	4200 92	40
1	**4200 83**	**4200 93**	63
1	**4200 84**	4200 94	80
1	**4200 85**	**4200 95**	100
1	**4200 86**	**4200 96**	125
1	**4200 87**	**4200 97**	160
			Breaking capacity Icu 50 kA (400 V∿)
1	4201 20	4201 30	16
1	4201 21	4201 31	25
1	4201 22	4201 32	40
1	4201 23	4201 33	63
1	4201 24	4201 34	80
1	4201 25	4201 35	100
1	4201 26	4201 36	125
1	4201 27	4201 37	160

MCCBs with electronic earth leakage module

Thermal adjustable from 0.8 to 1 In
Magnetic fixed at 10 In (fixed at 400 A for In 16 A and 25 A)
Equipped with earth leakage module with LCD screen
Adjustable sensitivity: 0.03 - 0.3 - 1 - 3 A
Adjustable tripping: 0 - 0.3 - 1 - 3s (with 0.03 A possible only 0s)

Pack	Cat.Nos 4P	In (A)
		Breaking capacity Icu 16 kA (400 V∿)
1	4200 30	16
1	4200 31	25
1	4200 32	40
1	4200 33	63
1	4200 34	80
1	4200 35	100
1	4200 36	125
1	4200 37	160
		Breaking capacity Icu 25 kA (400 V∿)
1	4200 70	16
1	4200 71	25
1	4200 72	40
1	4200 73	63
1	4200 74	80
1	4200 75	100
1	4200 76	125
1	4200 77	160
		Breaking capacity Icu 36 kA (400 V∿)
1	4201 10	16
1	4201 11	25
1	4201 12	40
1	4201 13	63
1	4201 14	80
1	4201 15	100
1	4201 16	125
1	4201 17	160
		Breaking capacity Icu 50 kA (400 V∿)
1	4201 50	16
1	4201 51	25
1	4201 52	40
1	4201 53	63
1	4201 54	80
1	4201 55	100
1	4201 56	125
1	4201 57	160

DPX³ 160 equipment and mounting accessories

NEW

4210 40

4210 36

Pack	Cat.Nos	Equipment for plug-in version
		A plug-in version DPX³ is a fixed version DPX³ mounted on a plug-in base
		Plug-in bases for DPX³ 160
		Front or rear terminal mounting base
1	4210 40	For DPX³ 160 - 3P
1	4210 41	For DPX³ 160 - 4P with or without earth leakage module
		Connectors for auxiliary contacts
1/5	4210 44	Set of connectors
		Padlocks for plug-in base
1/10	4210 45	Ronis locking accessory
1/10	4210 46	Profalux locking accessory
1/10	4210 47	Padlock accessory

		Connection accessories
		Cage terminals
		For Cu/Al cables, 1 x 95 mm² for flexible cables and 1 x 120 mm² for rigid cable and bars or lugs 18 mm
1/2	4210 26	Set of 3 terminals
1/2	4210 27	Set of 4 terminals
		Insulated shields
1/2	4210 70	Set of 3 insulated shields
		Extended front terminals
		For copper bars
1/12	4210 28	Set of 3 terminals
1/12	4210 29	Set of 4 terminals
		Spreaders
		For incoming bars or cable lugs
1	6250 02	Set of 3 spreaders for DPX³ 160 3P
1	6250 06	Set of 4 spreaders for DPX³ 160 4P
		Rear terminals
		Flat swivel terminals
		Used to convert a fixed version with front terminals to a fixed version with rear terminals
1/6	4210 36	Set of 3 rear terminals for DPX³ 160 3P
1/6	4210 37	Set of 4 rear terminals for DPX³ 160 4P

		Sealable terminal shields
		For front terminals
1/4	4210 54	For DPX³ 160 3P
1/5	4210 55	For DPX³ 160 3P
		For rear terminals
1/4	4210 50	For DPX³ 160 3P
1/5	4210 51	For DPX³ 160 4P

		Fixing plates
		For fixing DPX³ 160 on ⊔ rail or on plate
1/5	4210 71	For DPX³ 160 3P/4P without earth leakage module
1/5	4210 73	For DPX³ 160 4P with earth leakage module
1/8	4210 68	For DPX³ 160 3P/4P with side mounting motor operator

DPX³ 160
connection

■ Connection

Direct connection

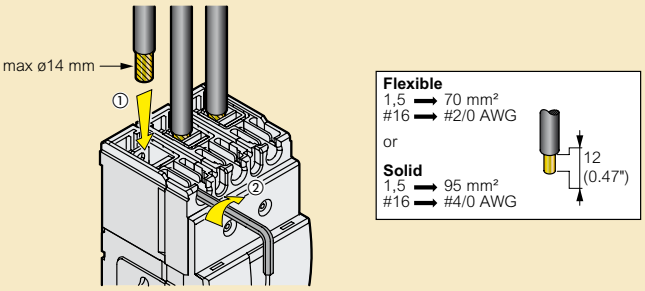

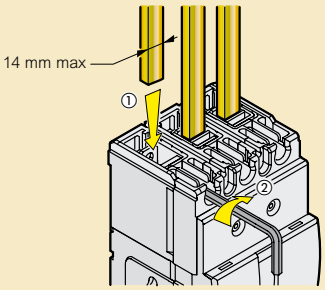

Spreaders

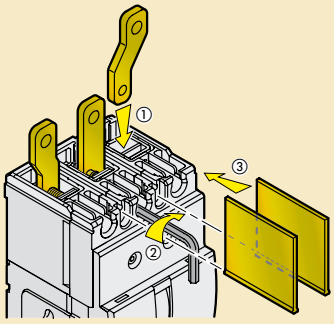

Rear terminals

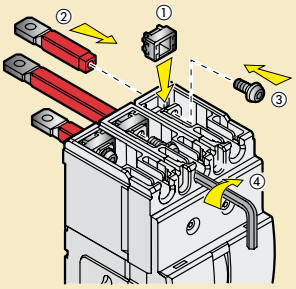

Sealable terminal shield

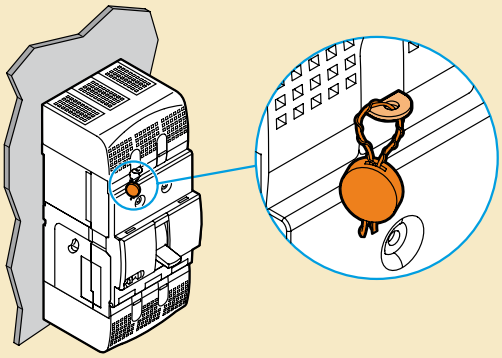

DPX³ 250 thermal magnetic

NEW

MCCBs from 100 to 250 A

4202 05

4202 25

Technical characteristics and tripping curves (p. 50-56)
Dimensions (p. 43)

MCCBs for switching, remote tripping and protection of low voltage electrical system
Supplied with insulated shileds, screw terminals 120 mm² max. (flexible cable) or 150 mm² max. rigid cable with accessories
Can be fitted with accessories and DPX³ common auxiliaires
Conform to IEC 60947-2

MCCBs

Thermal adjustable from 0.8 to 1 In
Magnetic adjustable from 5 to 10 In

Pack	Cat.Nos 3P	Cat.Nos 4P	In (A)
			Breaking capacity Icu 25 kA (400 V∿)
1	4202 05	4202 15	100
1	4202 07	4202 17	160
1	4202 08	4202 18	200
1	4202 09	4202 19	250
			Breaking capacity Icu 36 kA (400 V∿)
1	4202 35	4202 45	100
1	4202 37	4202 47	160
1	**4202 38**	**4202 48**	200
1	**4202 39**	**4202 49**	250
			Breaking capacity Icu 50 kA (400 V∿)
1	4202 65	4202 75	100
1	4202 67	4202 77	160
1	4202 68	4202 78	200
1	**4202 69**	**4202 79**	250
			Breaking capacity Icu 70 kA (400 V∿)
1	4206 05	4206 15	100
1	4206 07	4206 17	160
1	4206 08	4206 18	200
1	4206 09	4206 19	250

MCCBs with electronic earth leakage module

Thermal adjustable from 0.8 to 1 In
Magnetic adjustable from 5 to 10 In
Equipped with earth leakage module with LCD screen
Adjustable sensitivity: 0.03 - 0.3 - 1 - 3 A
Adjustable tripping: 0 - 0.3 - 1 - 3s (with 0.03 A possible only 0s)

Pack	Cat.Nos 4P	In (A)
		Breaking capacity Icu 25 kA (400 V∿)
1	4202 25	100
1	4202 27	160
1	4202 28	200
1	4202 29	250
		Breaking capacity Icu 36 kA (400 V∿)
1	4202 55	100
1	4202 57	160
1	4202 58	200
1	4202 59	250
		Breaking capacity Icu 50 kA (400 V∿)
1	4202 85	100
1	4202 87	160
1	4202 88	200
1	4202 89	250
		Breaking capacity Icu 70 kA (400 V∿)
1	4206 25	100
1	4206 27	160
1	4206 28	200
1	4206 29	250

DPX³ 250 microprocessor release

NEW

MCCBs from 40 to 250 A

4203 69

4203 25

Technical characteristics and tripping curves (p. 50-56)
Dimensions (p. 43)

MCCBs for switching, remote tripping and protection of low voltage electrical system
Supplied with insulated shileds, screw terminals 120 mm² max. (flexible cable) or 150 mm² max. rigid cable with accessories
Can be fitted with accessories and DPX³ common auxiliaires
Conform to IEC 60947-2

MCCBs

Protection against overloads:
Ir adjustable from 0.4 to 1 x In
Tr adjustable from 3 to 15s
Protection against short circuits:
Isd adjustable from 1.5 to 10 x Ir
Tsd adjustable from 0 to 0.5s

Pack	Cat.Nos 3P	Cat.Nos 4P	In (A)
			Breaking capacity Icu 25 kA (400 V∿)
1	4203 02	4203 12	40
1	4203 05	4203 15	100
1	4203 07	4203 17	160
1	4203 09	4203 19	250
			Breaking capacity Icu 36 kA (400 V∿)
1	4203 32	4203 42	40
1	4203 35	4203 45	100
1	4203 37	4203 47	160
1	4203 39	4203 49	250
			Breaking capacity Icu 50 kA (400 V∿)
1	4203 62	4203 72	40
1	4203 65	4203 75	100
1	4203 67	4203 77	160
1	4203 69	4203 79	250
			Breaking capacity Icu 70 kA (400 V∿)
1	4206 35	4206 45	40
1	4206 37	4206 47	100
1	4206 38	4206 48	160
1	4206 39	4206 49	250

MCCBs with electronic earth leakage module

Protection against overloads:
Ir adjustable from 0.4 to 1 x In
Tr adjustable from 3 to 15s
Protection against short circuits:
Isd adjustable from 1.5 to 10 x Ir
Tsd adjustable from 0 to 0.5s
Equipped with earth leakage module with LCD screen
Adjustable sensitivity: 0.03 - 0.3 - 1 - 3 A
Adjustable tripping: 0 - 0.3 - 1 - 3s (with 0.03 A possible only 0s)

Pack	Cat.Nos 4P	In (A)
		Breaking capacity Icu 25 kA (400 V∿)
1	4203 22	40
1	4203 25	100
1	4203 27	160
1	4203 29	250
		Breaking capacity Icu 36 kA (400 V∿)
1	4203 52	40
1	4203 55	100
1	4203 57	160
1	4203 59	250
		Breaking capacity Icu 50 kA (400 V∿)
1	4203 82	40
1	4203 85	100
1	4203 87	160
1	4203 89	250
		Breaking capacity Icu 70 kA (400 V∿)
1	4206 55	40
1	4206 57	100
1	4206 58	160
1	4206 59	250

DPX³ 250 microprocessor release

NEW

MCCBs from 40 to 250 A (continued)

4206 49

Technical characteristics and tripping curves (p. 50-56)
Dimensions (p. 43)

MCCBs for switching, remote tripping and protection of low voltage electrical system
Supplied with insulated shileds, screw terminals 120 mm² max. (flexible cable) or 150 mm² max. rigid cable with accessories
Can be fitted with accessories and DPX³ common auxiliaires
Conform to IEC 60947-2

MCCBs with energy metering central unit

Protection against overloads:
Ir adjustable from 0.4 to 1 x In
Tr adjustable from 3 to 15s
Protection against short circuits:
Isd adjustable from 1.5 to 10 x Ir
Tsd adjustable from 0 to 0.5s
Integrated energy metering central unit with LCD screen; currents, voltage, frequency, power, energy and harmonics

Pack	Cat.Nos 3P	Cat.Nos 4P	In (A)
			Breaking capacity Icu 25 kA (400 V∿)
1	4204 02	4204 12	40
1	4204 05	4204 15	100
1	4204 07	4204 17	160
1	4204 09	4204 19	250
			Breaking capacity Icu 36 kA (400 V∿)
1	4204 32	4204 42	40
1	4204 35	4204 45	100
1	4204 37	4204 47	160
1	4204 39	4204 49	250
			Breaking capacity Icu 50 kA (400 V∿)
1	4204 62	4204 72	40
1	4204 65	4204 75	100
1	4204 67	4204 77	160
1	4204 69	4204 79	250
			Breaking capacity Icu 70 kA (400 V∿)
1	4206 65	4206 75	40
1	4206 67	4206 77	100
1	4206 68	4206 78	160
1	4206 69	4206 79	250

MCCBs with energy metering central unit and electronic earth leakage module

Protection against overloads:
Ir adjustable from 0.4 to 1 x In
Tr adjustable from 3 to 15s
Protection against short circuits:
Isd adjustable from 1.5 to 10 x Ir
Tsd adjustable from 0 to 0.5s
Equipped with earth leakage module with LCD screen
Adjustable sensitivity: 0.03 - 0.3 - 1 - 3 A
Adjustable tripping: 0 - 0.3 - 1 - 3s (with 0.03 A possible only 0s)
Integrated energy metering central unit with LCD screen; currents, voltage, frequency, power, energy and harmonics

Pack	Cat.Nos 4P	In (A)
		Breaking capacity Icu 25 kA (400 V∿)
1	4204 22	40
1	4204 25	100
1	4204 27	160
1	4204 29	250
		Breaking capacity Icu 36 kA (400 V∿)
1	4204 52	40
1	4204 55	100
1	4204 57	160
1	4204 59	250
		Breaking capacity Icu 50 kA (400 V∿)
1	4204 82	40
1	4204 85	100
1	4204 87	160
1	4204 89	250
		Breaking capacity Icu 70 kA (400 V∿)
1	4206 85	40
1	4206 87	100
1	4206 88	160
1	4206 89	250

Communication interface (p. 24)

DPX³ 250 microprocessor release

MCCBs from 40 to 250 A (continued)

NEW

4205 49

Technical characteristics and tripping curves (p. 50-56)
Dimensions (p. 43)

MCCBs for switching, remote tripping and protection of low voltage electrical system
Supplied with insulated shileds, screw terminals 120 mm² max. (flexible cable) or 150 mm² max. rigid cable with accessories
Can be fitted with accessories and DPX³ common auxiliaires
Conform to IEC 60947-2

Microprocessor release MCCBs with earth fault protection

Protection against averloads:
Ir adjustable from 0.4 to 1 x In
Tr adjustable from 3 to 15s
Protection against short circuits:
Isd adjustable from 1.5 to 10 x Ir
Tsd adjustable from 0 to 0.5s
Protection against earth fault:
Ig adjustable: from 0.2 to 1 x In and OFF position
Tg adjustable from 0.1 to 1s

Pack	Cat.Nos 3P	Cat.Nos 4P	In (A)
			Breaking capacity Icu 25 kA (400 V∿)
1	4205 02	4205 12	40
1	4205 05	4205 15	100
1	4205 07	4205 17	160
1	4205 09	4205 19	250
			Breaking capacity Icu 36 kA (400 V∿)
1	4205 22	4205 32	40
1	4205 25	4205 35	100
1	4205 27	4205 37	160
1	4205 29	4205 39	250
			Breaking capacity Icu 50 kA (400 V∿)
1	4205 42	4205 52	40
1	4205 45	4205 55	100
1	4205 47	4205 57	160
1	4205 49	4205 59	250
			Breaking capacity Icu 70 kA (400 V∿)
1	4206 92	4207 02	40
1	4206 95	4207 05	100
1	4206 97	4207 07	160
1	4206 99	4207 09	250

DPX³ 250 equipment and mounting accessories

4210 44

4210 31

4210 72

Pack	Cat.Nos	
		Equipment for plug-in version
		A plug-in version DPX³ is a fixed version DPX³ mounted on a plug-in base
		Plug-in bases for DPX³ 160
		Front or rear terminal mounting base
1	4210 42	For DPX³ 250 - 3P
1	4210 43	For DPX³ 250 - 4P with or without earth leakage module
		Connectors for auxiliary contacts
1/5	4210 44	Set of connectors
		Padlocks for plug-in base
1/10	4210 45	Ronis locking accessory
1/10	4210 46	Profalux locking accessory
1/10	4210 47	Padlock accessory

Connection accessories

Cage terminals
For Cu/Al cables, 1 x 150 mm² for flexible cables and 1 x 180 mm² for rigid cable and bars or lugs 25 x 8 mm

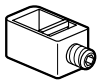

1/8	4210 30	Set of 3 terminals
1/8	4210 31	Set of 4 terminals

Insulated shields

1/2	4210 70	Set of 3 insulated shields

Spreaders
For incoming bars or cable lugs

1	6250 14	Set of 3 spreaders for DPX³ 250 3P
1	6250 18	Set of 4 spreaders for DPX³ 250 4P

Rear terminals
Flat swivel terminals
Used to convert a fixed version with front terminals to a fixed version with rear terminals

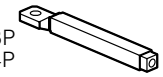

1/6	4210 38	Set of 3 rear terminals for DPX³ 250 3P
1/6	4210 39	Set of 4 rear terminals for DPX³ 250 4P

Sealable terminal shields

For front terminals

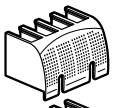

1/5	4210 56	For DPX³ 250 3P
1/3	4210 57	For DPX³ 250 4P

For rear terminals

1/5	4210 52	For DPX³ 250 3P
1/3	4210 53	For DPX³ 250 4P

Fixing plates

For fixing DPX³ 250 on ⊥ rail or on plate

1/16	4210 72	For DPX³ 250 3P/4P without earth leakage module
1/16	4210 74	For DPX³ 250 4P with earth leakage module
1/8	4210 69	For DPX³ 250 3P/4P with side mounting motor operator

DPX³ 160 and 250 common auxiliaries and accessories

NEW

4210 00

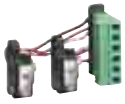
4210 10

4210 11

4210 16

4210 22

4210 58

Pack	Cat.Nos	Supply invertor type
		Plate for mounting and interlocking of 2 DPX³ For 2 DPX³ 160 or 2 DPX³ 250 or 1 DPX³ 160 and 1 DPX³ 250
1	4210 58	For fixed version
1/2	4210 59	For plug-in and draw-out version

Pack	Cat.Nos	Rotary handles
		Direct on DPX
1/5	**4210 00**	Standard handle for thermal magnetic DPX³ without earth leakage module
1/5	**4210 01**	Standard handle for microprocessor DPX³ and/or with earth leakage module
1/5	4210 02	Handle for emergency use for thermal magnetic DPX³ without earth leakage module
1/5	4210 03	Handle for emergency use for microprocessor DPX³ and/or with earth leakage module
		Vari-depth handles
		For all version of DPX³
1	**4210 04**	Standard handle
1	4210 05	Handle for emergency use
		Locking accessories
1/12	4210 06	Ronis for direct handle
1/12	4210 07	Profalux for direct handle
1/3	4210 08	Ronis for vari-depth handle
1/3	4210 09	Profalux for vari-depth handle

Pack	Cat.Nos	Motor-driven handles
		Motor operators 24 to 230 V∿/⎓
1	4210 60	Side motor operator
1/4	4210 61	Front motor operator
		Locking accessories
1/12	4210 62	Ronis key barrel for front motor operator
1/12	4210 63	Profalux key barrel for front motor operator
1/12	4210 64	Padlock for front motor operator
1/12	4210 65	Ronis key barrel for side motor operator
1/12	4210 66	Profalux key barrel for side motor operator
1/12	4210 67	Padlock for side motor operator

Pack	Cat.Nos	Auxiliaries
		Auxiliary contacts
1/12	**4210 10**	1 NC + 1 NO auxiliary contact for rotary handles
1/12	**4210 11**	Auxiliary contact or fault signalling contact
1/8	4210 48	Signalling contact plugged-in (for DPX³ plug-in version)
		Shunt releases
1/12	4210 12	12 V∿/⎓
1/12	4210 13	24 V∿/⎓
1/12	4210 14	48 V∿/⎓
1/12	4210 15	110-130 V∿/⎓
1/12	**4210 16**	200-277 V∿/⎓
1/12	**4210 17**	380-480 V∿/⎓
		Undervoltage releases
1/12	4210 18	12 V∿/⎓
1/12	4210 19	24 V∿/⎓
1/12	4210 20	48 V∿/⎓
1/12	4210 21	110-130 V∿/⎓
1/12	**4210 22**	200-240 V∿/⎓
1/12	4210 23	277 V∿
1/12	**4210 24**	380-415 V∿
1/12	4210 25	440-480 V∿

Pack	Cat.Nos	Locking accessory
1/12	4210 49	Padlock for locking in "open" position

Pack	Cat.Nos	Communication interface
1/6	4210 75	Modbus

DPX³ 160/250

■ Auxiliaries mounting

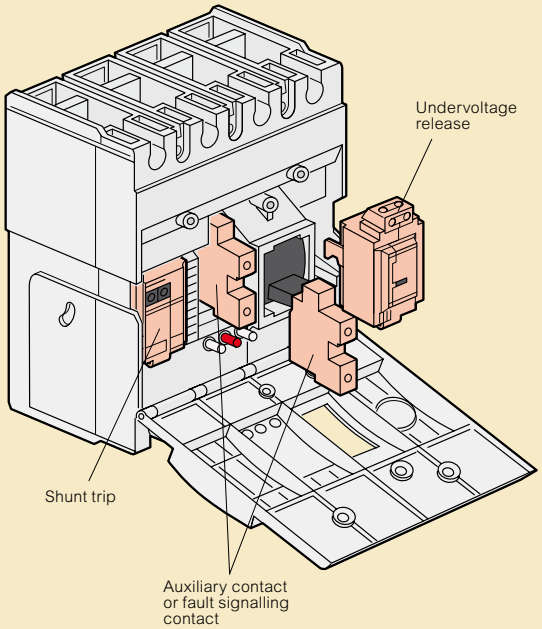

■ Side mounting motor-driven handle

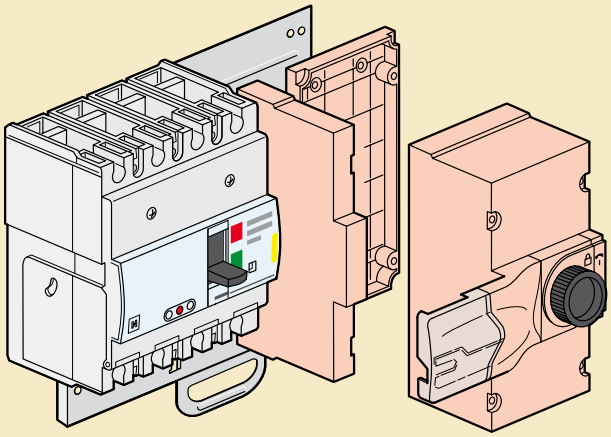

■ Front mounting motor-driven handle

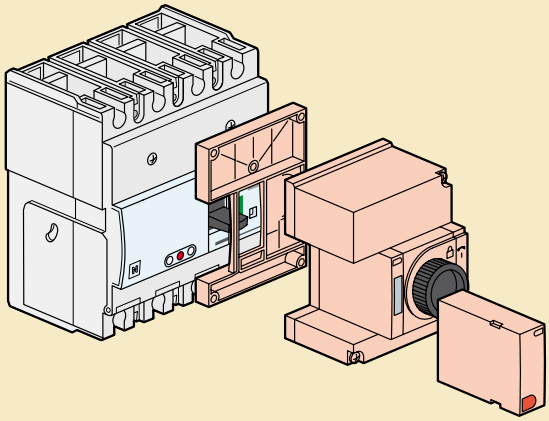

■ Direct rotary handle

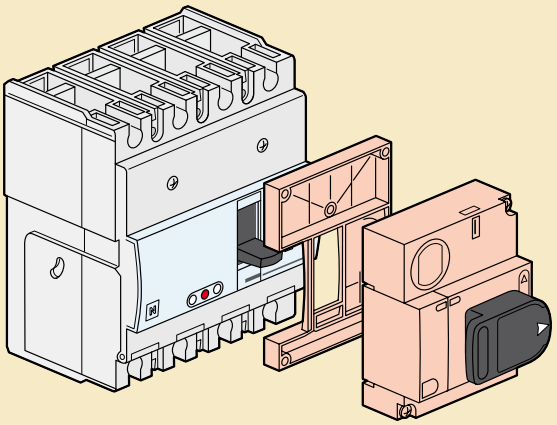

■ Plug-in version

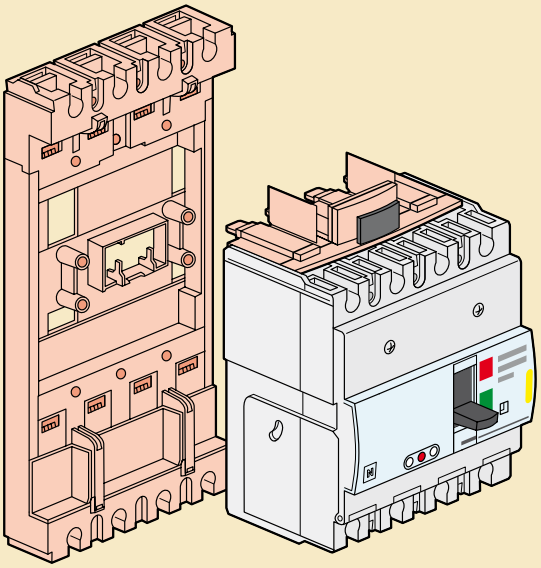

■ Supply invertor type

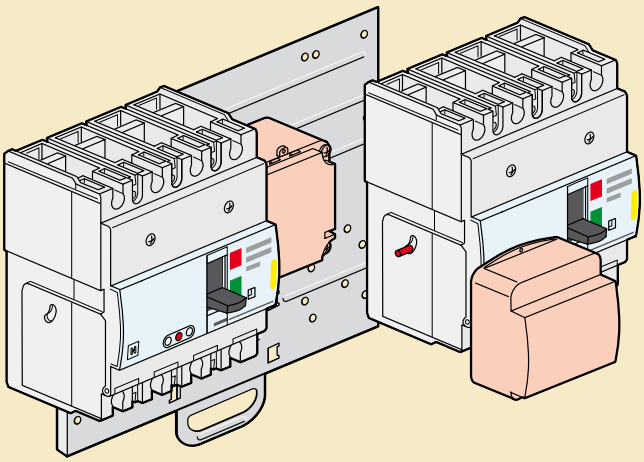

DPX™ 250
thermal magnetic and microprocessor release MCCBs from 40 to 250 A

0253 56

0253 73

Dimensions (p. 45)
Electrical characteristics (p. 55)

MCCBs for switching, remote tripping and protection of low voltage electrical system
Can be fitted with auxiliaries
Can be used with earth leakage modules or with earth leakage relays (p. 39)
Conform to IEC 60947-2

Thermal magnetic MCCBs

Thermal adjustable from 0.64 to 1 In
Magnetic adjustable from 3.5 to 10 In

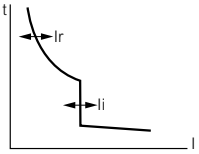

Breaking capacity Icu 36 kA (400 V∿)

Pack	Cat.Nos 3P	Cat.Nos 4P	In (A)
1	0253 28	0253 45	40
1	0253 29	0253 46	63
1	0253 30	0253 47	100
1	0253 31	0253 48	160
1	**0253 32**	0253 49	250

Pack	Cat.Nos 3P + N/2	In (A))
1	0253 40	100
1	0253 41	160
1	0253 42	250

Breaking capacity Icu 70 kA (400 V∿)

Pack	Cat.Nos 3P	Cat.Nos 4P	In (A)
1	0253 52	0253 69	40
1	0253 53	0253 70	63
1	0253 54	0253 71	100
1	0253 55	0253 72	160
1	0253 56	0253 73	250

Pack	Cat.Nos 3P + N/2	In (A)
1	0253 64	100
1	0253 65	160
1	0253 66	250

Breaking capacity Icu 100 kA (400 V∿)

Pack	Cat.Nos 3P	Cat.Nos 4P	In (A)
1	0253 80	0253 89	100
1	0253 81	0253 90	160
1	0253 82	0253 91	250

Microprocessor release S1 MCCBs

Adjustment of Ir and Isd
Instantaneous protection 40 A: if = 1 kA
100/160/250 A: if = 3 kA
Indicator lamp
Minimum current for indicator lamp operation (30 % of In) - green: normal - fixed red: I ≥ 0.9 Ir - flushing red: I ≥ 1.05 Ir
Connector for test unit
Dynamic selectivity
4P version: adjustment of neutral on front panel

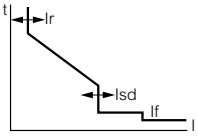

Breaking capacity Icu 36 kA (400 V∿)

Pack	Cat.Nos 3P	Cat.Nos 4P	In (A)
1	0254 01	0254 07	40
1	0254 03	0254 09	100
1	0254 04	0254 10	160
1	0254 05	0254 11	250

Breaking capacity Icu 70 kA (400 V∿)

Pack	Cat.Nos 3P	Cat.Nos 4P	In (A)
1	0254 13	0254 19	40
1	0254 15	0254 21	100
1	0254 16	0254 22	160
1	0254 17	0254 23	250

DPX™ 250
thermal magnetic and microprocessor release MCCBs from 40 to 250 A (continued)

0260 55

0260 53

0265 32

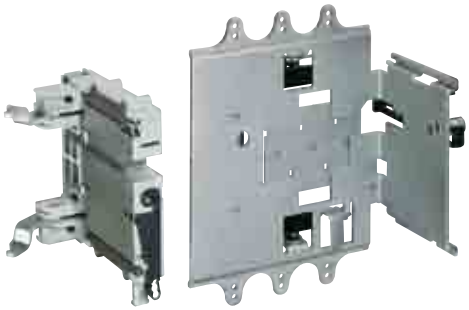
0265 46

Microprocessor release S2 MCCBs

Adjustment of Ir, Isd, Tr, Tsd
Instantaneous protection 40 A: if = 1 kA
100/160/250 A: if = 3 kA
Indicator lamp
Minimum current for indicator lamp operation (30 % of In) - green: normal - fixed red: I ≥ 0.9 Ir - flushing red: I ≥ 1.05 Ir
Connector for test unit
Logic and dynamic selectivity
4P version: adjustment of neutral on front panel

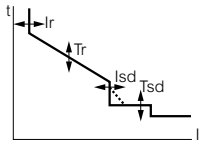

Pack	Cat.Nos 3P	Cat.Nos 4P	
			Breaking capacity Icu 36 kA (400 V∿)
			In (A)
1	0254 40	0254 45	40
1	0254 41	0254 46	100
1	0254 42	0254 47	160
1	0254 43	0254 48	250
			Breaking capacity Icu 70 kA (400 V∿)
1	0254 50	0254 55	40
1	0254 51	0254 56	100
1	0254 52	0254 57	160
1	0254 53	0254 58	250

Electronic earth leakage modules

Can be fitted onto DPX/DPX-I 250
Adjustable, sealable sensitivity: 0.03 - 0.3 - 1 - 3 A
Adjustable, time delay: 0 - 0.3 - 1 - 3 s
Test push-buttons
Reset push-button
Remote earth fault signalling contact
Switch for mechanical tests (installation insulation test)
Mounted underneath

	3P	4P	
			Standard
			In (A)
1		0260 51	160
1	0260 54	0260 55	250
			LED version
			Monitors the isolation state of the installation via a series of LEDs
		4P	In (A)
1		0260 53	160
1		0260 57	250

Plug-in version

A plug-in is a DPX fitted with tulip contacts mounted on a base

Pack	3P	4P	
			Tulip contacts
1	0265 29	0265 30	Set of tulip contacts (supplied with an incoming/outgoing protective cover)
			Bases for DPX only
			Accept DPX/DPX-I fitted with tulip contacts
1	0265 31	0265 32	Front terminal mounting base
1	0265 33	0265 34	Rear terminal mounting base with threaded rod
1	0265 35	0265 36	Flat rear terminal mounting base
		4P	**Bases for DPX with earth leakage module**
1		0265 37	Front terminal mounting base
1		0265 38	Rear terminal mounting base with threaded rod
1		0265 39	Flat rear terminal mounting base
			Accessories
1/5		0263 99	Set of connectors (8-pin)
1/50		0098 19	Set of connectors (6-pin)
1/6		0263 43	Set of 2 extractor handle

Draw-out version

A DPX draw-out version is a plug-in DPX fitted with a "Debro-lift" mechanism which can be used to withdraw the DPX while keeping it on its base

Pack	3P	4P	
			"Debro-lift" mechanism
			Supplied with a rigid slide and handle for drawing-out
1	0265 45	0265 46	For DPX base only
1		0265 47	For DPX base with earth leakage module
			Key lock for "Debro-lift" mechanism
			Enable locking of DPX in drawn-out position
1/12		0265 76	1 key Ronis for DPX only
1/5		0265 78	1 key Ronis for motorised DPX or with rotary handle
			Accessories for "Debro-lift" mechanism
1		0265 75	Isolated handle for drawing-out
1/8		0265 74	Signalling contact (plugged-in/drawn-out)

Supply invertor type

A supply invertor type is composed of one plate with interlock for 2 devices

Pack	Cat.Nos	
1	0264 08	Universal plate for MCCB or trip-free switch fixed version
1	0264 03	Universal plate for MCCB or trip-free switch plug-in and draw-out version

DPX™ 250
equipment and accessories

0262 22

0262 79

0262 80

0261 30

0048 68

Pack	Cat.Nos	Rotary handles
		Direct on DPX
1	0262 22	Standard (grey)
1/8	0262 24	For emergency use (red/yellow) - can be fitted on Cat.Nos 0262 22, 0262 41 or 0262 81
		Vari-depth handle IP 55
		Comprising: connection rod, bracket, self-adhesive drilling template, mounting accessories and door lock mechanism
1/3	0262 79	Standard (black)
1/3	0262 80	Conversion kit for emergency use Can be fitted on Cat.No 0262 79
		Locking accessories
1/6	0262 93	Profalux for vari-depth handle
1/6	0262 94	Ronis for vari-depth handle
1	OS0262 25/3	For locking the rotary handles, set of 3 locks with keys

		Motor-driven handles
		Front operated
1	0261 30	24 V∿/⎓
1	0261 34	230 V∿
		Accessory
1/5	0261 59	Ronis locking accessory

Pack	Cat.Nos		Accessories
			Insulated shields
1/4	0262 30		Set of 3
	3P	4P	**Sealable terminal shields**
1/4	0262 26	0262 27	Set of 2 long terminal shields
1/4	0262 28	0262 29	Set of 2 short terminal shields
			Padlock
1/5	0262 21		For locking in "open" position
			Cage terminals
1/5	0262 35		Set of 4 terminals for cable 185 mm² max. (rigid) or 150 mm² max. (flexible)
			Adaptor for lug
			For connecting bare cables with wide lug
1/6	0262 31		Set of 1 adaptor + insulated shields
			Extended front terminals
1/5	0262 32		Set of 4
	3P	4P	**Spreaders**
1	**6250 14**	**6250 18**	Set of spreaders incoming or outgoing
			Rear terminals
			Used to convert the fixed version with front terminals to the fixed version with rear terminals
1/4	0263 31	0263 32	Set of rear terminals, incoming or outgoing
1/4	0265 27	0265 28	Set of flat rear terminals, incoming or outgoing
			Distribution terminal 250 A
1/48	0048 68		250 A - 4 outputs 35 mm² flexible and 2 outputs 25 mm² flexible - Isc peak 36 kÂ Can be fitted directly onto downstream terminal of DPX 250/250 ER and DPX-IS 250

Bold catalogue numbers are products normally available with Legrand (India) stockists. **Cat. nos. that are not bold** - delivery within 4 - 8 weeks from the date of order.
Bold packing quantity is our mandatory packing. Orders to be placed by Legrand (India) stockists in multiples of the same.
Red catalogue numbers: New products

DPX™ 630

thermal magnetic and microprocessor release MCCBs from 250 to 630 A

0256 31

0256 35

Dimensions (p. 46)
Electrical characteristics (p. 50-59)

MCCBs for switching, remote tripping and protection of low voltage electrical system
Can be fitted with auxiliaries
Can be used with earth leakage modules or with earth leakage relays (p. 39)
Conform to IEC 60947-2

Thermal magnetic MCCBs

Thermal adjustable from 0.8 to 1 In
Magnetic adjustable from 5 to 10 In

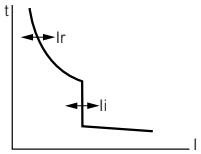

Pack	Cat.Nos 3P	Cat.Nos 4P	In (A)
			Breaking capacity Icu 36 kA (400 V∿)
1	**0255 23**	0255 38	400
1	0255 24	0255 40	630
			Breaking capacity Icu 70 kA (400 V∿)
1	0255 43	0255 58	400
1	0255 44	0255 60	630
	3P + N/2		In (A)
1	0255 53		400
1	0255 54		630
			Breaking capacity Icu 100 kA (400 V∿)
1	0255 63	0255 78	400
1	0255 64	0255 80	630

DPX 630 microprocessor release S1

Adjustment of Ir, Isd (p. 63)
Instantaneous protection If = 5 kA
Green indicator lamp
Connector for test unit
Dynamic selectivity
4P version: adjustement of neutral on front panel

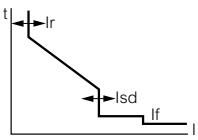

Pack	Cat.Nos 3P	Cat.Nos 4P	In (A)
			Breaking capacity Icu 36 kA (400 V∿)
1	0256 02	0256 06	400
1	0256 03	0256 07	630
			Breaking capacity Icu 70 kA (400 V∿)
			In (A)
1	0256 10	0256 14	400
1	0256 11	0256 15	630

Microprocessor release S2 MCCBs

Adjustment of Ir, Isd, Tr, Tsd (opposite)
Instantaneous protection If = 5 kA
Green indicator lamp
Connector for test unit
Logic and dynamic selectivity
4P version: adjustement of neutral on front panel

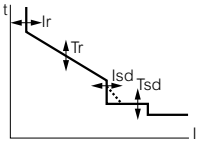

Pack	Cat.Nos 3P	Cat.Nos 4P	In (A)
			Breaking capacity Icu 36 kA (400 V∿)
1	0256 27	0256 31	400
1	0256 28	0256 32	630
			Breaking capacity Icu 70 kA (400 V∿)
			In (A)
1	0256 35	0256 39	400
1	0256 36	0256 40	630
			Breaking capacity Icu 100 kA (400 V∿)
			In (A)
1	0256 43	0256 47	400
1	0256 44	0256 48	630

DPX™ 630
thermal magnetic and microprocessor release MCCBs from 250 to 630 A (continued)

DPX™ 630

0260 63

Pack	Cat.Nos 3P	Cat.Nos 4P	
			Microprocessor release Sg MCCBs
			Adjustment of Ir, Isd, Tr, Tsd (opposite) Instantaneous protection If = 5 kA Ig adjustable from 0.2 to 1 x In and OFF position Tg adjustable from 0.1 to 1s Green indicator lamp Connector for test unit Logic and dynamic selectivity 4P version: adjustement of neutral on front panel earth fault measurements
			Breaking capacity Icu 36 kA (400 V∿)
	3P	4P	In (A)
1	0256 52	0256 56	400
1	0256 53	0256 57	630
			Breaking capacity Icu 70 kA (400 V∿)
			In (A)
1	0256 60	0256 64	400
1	0256 61	0256 65	630

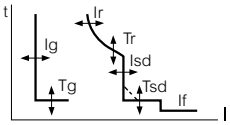

Pack	Cat.Nos 3P	Cat.Nos 4P	
			Earth leakage modules
			Can be fitted onto DPX/DPX-I 630 Adjustable, sealable sensitivity: 0.03 - 0.3 - 1 - 3 A Adjustable, time delay: 0 - 0.3 - 1 - 3 s Test push-button Reset push-button Remote earth fault signalling contact Switch for mechanical tests (installation insulation test) Mounted underneath 230-500 V∿
			Standard
	3P	4P	In
1	0260 60	0260 61	400 A
1	0260 64	0260 65	630 A
			LED version
			Monitors the isolation state of the installation via a series of LEDs
		4P	In
1		0260 63	400 A
1		0260 67	630 A

■ Performance data

S1 - Adjustment of Ir, Isd

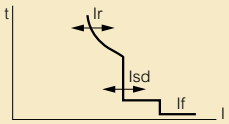

• Long delay protection against overloads with an adjustable threshold based on the rms value of the current:
Ir = 0.4 - 0.5 - 0.7 - 0.8 - 0.95 - 1 x In (8 steps)
Tr = 5 s (fixed at 6 tr)
• Short delay protection against short-circuits with an adjustable Im threshold:
Isd = 1.5 - 2 - 3 - 4 - 5 - 6 - 8 - 10 x Ir (8 steps)
Tsd = 0.05 s (fixed)
• Instantaneous protection
if with fixed threshold: If = 5 kA

S2 - Adjustment of Ir, Tr, Isd, Tsd

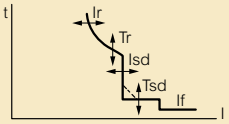

• Long delay protection against overloads with an adjustable threshold based on the rms value of the current:
Ir = 0.4 - 0.5 - 0.7 - 0.8 - 0.9 - 0.95 - 1 x In (8 steps)
Tr = 5 - 10 - 20 - 30 s (at 6 Ir) (4 steps)
• Short delay protection against short-circuits with an adjustable Isd threshold:
Isd = 1.5 - 2 - 3 - 4 - 5 - 6 - 8 - 10 x Ir (8 steps)
Tsd = 0 - 0.1 - 0.2 - 0.3 s (4 steps)
Tsd = 0.01 - 0.1 - 0.2 - 0.3 s at 12 x Ir (I^2t constant) (4 steps)
• Instantaneous protection against short-circuits
with fixed threshold: If = 5 kA

Sg - Adjustment of Ir, Tr, Isd, Tsd, Ig and Tg

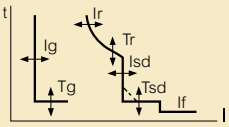

• Long delay protection against overloads with an adjustable threshold based on the rms value of the current :
Ir = 0.4 - 0.5 - 0.6 - 0.7 - 0.8 - 0.9 - 0.95 - 1 x In (8 steps)
Tr = 5 - 10 - 20 - 30 s (4 steps)
• Short delay protection against short-circuits with an adjustable Im threshold:
Isd = 1.5 - 2 - 3 - 4 - 5 - 6 - 8 - 10 x Ir (8 steps)
Tsd = 0.01 - 0.1 - 0.2 - 0.3 s (4 steps)
• Instantaneous protection against short-circuits with fixed threshold:
If = 5 kA
• Earth fault measurement:
Ig = 0.2 - 0.3 - 0.4 - 0.5 - 0.6 - 0.7 - 0.8 - 1 x In (8 steps)
Tg = 0.1 - 0.2 - 0.5 - 1 s (4 steps)

DPX™ 630
equipment and accessories

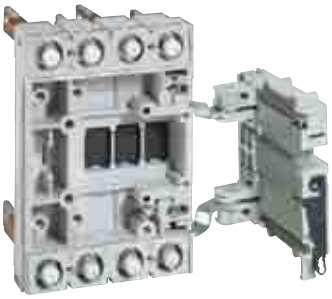
0265 57

0265 67

0262 50

0262 51

6250 04

Plug-in version

Pack	Cat.Nos 3P	Cat.Nos 4P	
			A plug-in is a DPX fitted with tulip contacts mounted on a base
			Tulip contacts
1	0265 50	0265 51	Set of tulip contacts (supplied with an incoming/outgoing protective cover)
			Bases for DPX only
			Accept DPX/DPX-I fitted with tulip contacts
1	0265 52	0265 53	Front terminal mounting base
1	0265 54	0265 55	Rear terminal mounting base with threaded rod
1	0265 56	0265 57	Flat rear terminal mounting base
	4P		**Bases for DPX with earth leakage module**
1	0265 58		Front terminal mounting base
1	0265 59		Rear terminal mounting base with threaded rod
1	0265 60		Flat rear terminal mounting base
			Accessories
1/6	0263 68		Set of 2 extractor handle
1/5	0263 99		Set of connectors (8-pin)

Draw-out version

Pack	Cat.Nos 3P	Cat.Nos 4P	
			A DPX draw-out version is a plug-in DPX fitted with a "Debro-lift" mechanism which can be used to withdraw the DPX while keeping it on its base
			"Debro-lift" mechanism
			Supplied with a rigid slide and handle for drawing-out
1	0265 66	0265 67	For DPX base only
1		0265 68	For DPX base with earth leakage module
			Key-lock for "Debro-lift" mechanism
			Enable locking of DPX in drawn-out position
1/12	0265 76		1 key Ronis for DPX only
1/5	0265 78		1 key Ronis for motorised DPX or with rotary handle
			Accessories for "Debro-lift" mechanism
1	0265 75		Isolated handle for drawing-out
1/8	0265 74		Signalling contact (plugged-in/drawn-out)

Supply invertor type

Pack	Cat.Nos	
		Factory assembled
		A supply invertor type is composed of one plate with interlock for 2 devices
1	0264 09	Plate for MCCB or trip-free switch fixed version
1	0264 04	Plate for MCCB or trip-free switch plug-in and draw-out version

Rotary handles

Pack	Cat.Nos	
		Direct on DPX
1	0262 41	Standard (grey)
1/8	0262 24	For emergency use (red/yellow) - can be fitted on Cat.Nos 0262 22, 0262 41 or 0262 81

Rotary handles (continued)

Pack	Cat.Nos	
		Vari-depth handle IP 55
		Comprising: connection rod, bracket, self-adhesive drilling template, mounting accessories and door lock mechanism
1/3	0262 81	Standard (grey)
		Locking accessories
1/6	0262 93	Profalux for vari-depth handle
1/6	0262 94	Ronis for vari-depth handle
1	OS0262 25/3	For locking the rotary handles, set of 3 locks with keys

Motor-driven handles

Pack	Cat.Nos	
		Front operated
1/2	0261 40	24 V∿/⎓
1/2	0261 44	230 V∿
		Accessory
1/5	0261 59	Ronis locking accessory

Accessories

Pack	Cat.Nos 3P	Cat.Nos 4P	
			Insulated shields
1/4	0262 30		Set of 3
			Sealable terminal shields
1	0262 44	0262 45	Set of 2
			Padlock
1/5	0262 40		For locking in "OPEN" position
			Cage terminals
1/5	0262 50		Set of 4 terminals for cable 300 mm² max. (rigid) or 240 mm² max. (flexible)
1/3	0262 51		Set of 4 high-capacity terminals for cable 2 x 240 mm² (rigid) or 2 x 185 mm² (flexible)
			Adaptor for lug
			For connecting bare cables with wide lugs
1/6	0262 46		Set of 4 adaptors + insulated shields
			Extended front terminals
1/3	0262 47		Set of 4
			Spreaders
1	6250 04	6250 08	Set of incoming or outgoing spreaders
			Rear terminals
			Used to convert the fixed version with front terminals to the fixed version with rear terminals
1	0263 50	0263 51	Set of incoming or outgoing swivel terminals
1	0263 52	0265 53	Set of incoming or outgoing flat terminals

legrand

XL³ enclosure for safety and flexibility

Protection & distribution up to 4000 A

TO BE INTRODUCED SHORTLY

- Totally type-tested system as per IEC 61439-I
- Completely bolted system for ease of assembly
- Modular design for numerous configurations
- Short time current withstand capacity upto 110 kA
- Design suitable for Form 4b
- IP 55 degree of protection also available
- Fire resistance of 750°C for 30 sec
- Compatible with Zucchini busbar trunking system
- Adjustable plinth height for the better spreading of cables
- Permanent earthing for internal components and external faceplates
- Perfectly house the whole range of Legrand ACBs, MCCBs, Capacitors, MCBs, Metering devices and OMPs like VSP, MPCB etc.

DPX™ 1250 and 1600

thermal magnetic and microprocessor release MCCBs from 800 to 1600 A

0258 16

0258 23

Dimensions (p. 47)
Electrical characteristics (p. 59-61)

MCCBs for switching, remote tripping and protection of low voltage electrical system
Can be fitted with auxiliaries (integrated terminal blocks)
Can be used with earth leakage modules or with earth leakage relays (p. 39)
Conform to IEC 60947-2

Thermal magnetic MCCBs

Thermal adjustable from 0.8 to 1 In
Magnetic adjustable from:
5 to 10 In

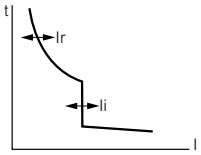

Pack	Cat.Nos 3P	Cat.Nos 4P	In (A)
			Breaking capacity Icu 50 kA (400 V∿)
1	0258 02	0258 09(1)	800
1	0258 03	0258 10(1)	1000
1	0258 04	0258 11(1)	1250
			Breaking capacity Icu 70 kA (400 V∿)
1	0258 16	0258 23(1)	800
1	0258 17	0258 24(1)	1000
1	0258 18	0258 25(1)	1250
			Breaking capacity Icu 100 kA (400 V∿)
1	0258 29	0258 38	630
1	0258 31	0258 40	1000
1	0258 32	0258 41	1250

Microprocessor release S1 MCCBs

Adjustment of Ir, Isd
Instantaneous protection If = 20 kA (for In 1600 A)
Indicator lamp
Minimum current for indicator lamp operation (20 % In): green: normal;
fixed red: I ≥ 0.9 Ir;
flashing red: I ≥ 1.05 Ir
Connector for test unit
Dynamic selectivity

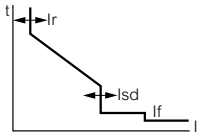

Pack	Cat.Nos 3P	Cat.Nos 4P	In (A)
			Breaking capacity Icu 50 kA (400 V∿)
1	0257 02	0257 06(2)	800
1	0257 03	0257 07(2)	1250
1	0257 04	0257 08(2)	1600
			Breaking capacity Icu 70 kA (400 V∿)
1	0257 10	0257 14(2)	800
1	0257 11	0257 15(2)	1250
1	0257 12	0257 16(2)	1600

(1) Neutral without protection
(2) Neutral settings 0 - 0.5 - 1 N (0 - 50% - 100% Neutral)

Bold catalogue numbers are products normally available with Legrand (India) stockists.
Cat. nos. that are not bold - delivery within 4 - 8 weeks from the date of order.
Bold packing quantity is our mandatory packing. Orders to be placed by Legrand (India) stockists in multiples of the same.

DPX™ 1250 and 1600

thermal magnetic and microprocessor release MCCBs from 800 to 1600 A

0257 30

0257 60

Dimensions (p. 47)
Electrical characteristics (p. 59-61)

MCCBs for switching, remote tripping and protection of low voltage electrical system
Can be fitted with auxiliaries (integrated terminal blocks)
Can be used with earth leakage modules or with earth leakage relays (p. 39)
Conform to IEC 60947-2

Microprocessor release S2 MCCBs

Adjustment of Ir, Isd, Tr, Tsd
Instantaneous protection If = 20 kA (for In 1600 A)
Indicator lamp
Minimum current for indicator lamp operation (20 % In): green: normal;
fixed red: I ≥ 0.9 Ir;
flashing red: I ≥ 1.05 Ir
Connector for test unit
Logic and dynamic selectivity

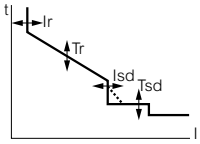

Breaking capacity Icu 50 kA (400 V∿)

Pack	Cat.Nos 3P	Cat.Nos 4P	In (A)
1	0257 26	0257 30(2)	800
1	0257 27	0257 31(2)	1250
1	0257 28	0257 32(2)	1600

Breaking capacity Icu 70 kA (400 V∿)

Pack	Cat.Nos 3P	Cat.Nos 4P	In (A)
1	0257 34	0257 38(2)	800
1	0257 35	0257 39(2)	1250
1	0257 36	0257 40(2)	1600

Microprocessor release Sg MCCBs

Adjustment of Ir, Isd, Tr, Tsd
Instantaneous protection If = 20 kA (for In 1600 A)
Ig adjustable from 0.2 to 1 x In and OFF position
Tg adjustable from 0.1 to 1s
Indicator lamp
Minimum current for indicator lamp operation (20 % In): green: normal;
fixed red: I ≥ 0.9 Ir;
flashing red: I ≥ 1.05 Ir
Connector for test unit
Logic and dynamic selectivity

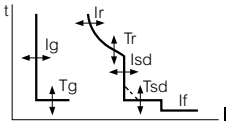

Breaking capacity Icu 50 kA (400 V∿)

Pack	Cat.Nos 3P	Cat.Nos 4P	In (A)
1	0257 51	0257 55	800
1	0257 52	0257 56	1250
1	0257 53	0257 57	1600

Breaking capacity Icu 70 kA (400 V∿)

Pack	Cat.Nos 3P	Cat.Nos 4P	In (A)
1	0257 59	0257 63	800
1	0257 60	0257 64	1250
1	0257 61	0257 65	1600

(1) Neutral without protection
(2) Neutral settings 0 - 0.5 - 1 N (0 - 50% - 100% Neutral)

Bold catalogue numbers are products normally available with Legrand (India) stockists. **Cat. nos. that are not bold** - delivery within 4 - 8 weeks from the date of order.
Bold packing quantity is our mandatory packing. Orders to be placed by Legrand (India) stockists in multiples of the same.
Red catalogue numbers: New products

DPX™ 1600
equipment and accessories

0265 84 (supplied assembled)

0262 60

0262 70

0262 67 + 0262 68

Pack	Cat.Nos		Draw-out version
			A DPX draw-out version is a plug-in DPX fitted with a "Debro-lift" mechanism which can be used to withdraw the DPX while keeping it on its base
			Draw-out base
			Base for DPX 1600 supplied with "Debro-lift" assembled a rigid slide and handle for drawing-out
	3P	4P	
1	0265 82	0265 83	Front terminals
1	0265 84	0265 85	Rear terminals
			Key lock for "Debro-lift" mechanism
			Enable locking of DPX in drawn-out position
1/12	0265 76		One key Ronis for DPX only
1/5	0265 80		Two key Ronis (one key supplied) for motorised DPX or with rotary handle
			Accessories for "Debro-lift" mechanism
1	0265 75		Isolated handle for drawing-out
1/8	0265 74		Signalling contact (plugged-in/drawn-out)

Pack	Cat.Nos	Supply invertor type
		A supply invertor type is composed of one plate with interlock for 2 devices
1	0264 10	Plate for MCCBs or trip-free switch fixed version
1	0264 05	Plate for MCCBs or trip-free switch plug-in and draw-out version

Pack	Cat.Nos	Rotary handles
		Direct on DPX
1	0262 61	Standard (black)
		Vari-depth handle IP 55
		Comprising: connection rod, bracket, self-adhesive drilling template, mounting accessories and door lock mechanism
1	0262 83	Standard (black)
1	0262 84	For emergency use (red/yellow)
		Locking accessories
1/6	0262 93	Profalux for vari-depth handle
1/6	0262 94	Ronis for vari-depth handle
1	OS0262 25/3	For locking the rotary handles, set of 3 locks with keys

Pack	Cat.Nos	Motor-driven handles
		Factory assembled
		Front operated
1	0261 54	230 V∿
		For DPX1600 up to 1250 A
		Front operated
1	0261 24	24 V∿/⎓
1	0261 25	48 V∿/⎓
1	0261 23	230 V∿/⎓
		For DPX1600 In = 1600 A
1	0261 19	24 V∿/⎓
1	0261 28	48 V∿/⎓
1	0261 27	230 V∿/⎓
		Locking accessory for motor-driven handles
1/5	0261 59	Ronis locking accessory
1/5	0261 58	Profalux locking accessory

Pack	Cat.Nos		Accessories
			Insulated shields
			Used to isolate the connections between each pole
1/3	0262 66		Set of 3
	3P	4P	**Sealable terminal shields**
1	0262 64	0262 65	Set of 2
			Padlock
1/4	0262 60		For locking in "open" position
			Cage terminals
1/5	0262 69		Set of 1 terminal for cables without lug 2 x 240 mm² for rigid cable or 2 x 185 mm² for flexible cable
1/6	0262 70		Set of 1 high-capacity terminal for cables without lug 4 x 240 mm² for rigid cable 4 x 185 mm² for flexible cable
			Extended front terminals
			Set of 4
1/5	0262 67		Short terminals for 630 - 1250 A (2 bars max. per pole)
1/3	0262 68		Long terminals for 1600 A (3 bars max. per pole)
	3P	4P	**Spreaders**
1	0262 73	0262 74	Set of incoming or outgoing spreaders
			Rear terminals
			Used to convert the fixed version with front terminals to the fixed version with rear terminals
			Set of incoming or outgoing rear terminals
1	0263 80	0263 82	Short terminals
1	0263 81	0263 83	Long terminals

Bold catalogue numbers are products normally available with Legrand (India) stockists. **Cat. nos. that are not bold** - delivery within 4 - 8 weeks from the date of order.
Bold packing quantity is our mandatory packing. Orders to be placed by Legrand (India) stockists in multiples of the same.
Red catalogue numbers: New products

DPX™ auxiliaries
for DPX and DPX-I

0261 85

0261 93

Pack	Cat.Nos	Auxiliary contact or fault signal
1/5	**0261 60**	For signalling the state of the contacts or opening of the MCCB on a fault For DPX/DPX-I Changeover switch 3 A - 240 V∿
		Releases
		Allow remote tripping of a DPX
		Shunt releases
		For DPX-I and DPX Shunt inrush power 300 VA
1/5	0261 64	Coil voltage 24 V∿/⎓
1/5	0261 65	Coil voltage 48 V∿/⎓
1/5	0261 66	Coil voltage 110 V∿/⎓
1/5	0261 67	Coil voltage 230 V∿/⎓
1/5	0261 68	Coil voltage 400 V∿/⎓
		Undervoltage releases
	For DPX-I, DPX 250 to 1600	For DPX-I and DPX Undervoltage power consumption 5 VA
1	0261 80	Coil voltage 24 V⎓
1	0261 81	Coil voltage 24 V∿
1	0261 82	Coil voltage 48 V⎓
1	0261 86	Coil voltage 110 V∿
1	0261 83	Coil voltage 230 V∿
1	0261 84	Coil voltage 400 V∿
		Time-lag (ms) undervoltage releases Allow remote tripping of a DPX Prevent false tripping in the event of AC supply microbreaks Require a time-lag module connected to the undervoltage releases below
		Number of modules
1/4	0261 90	Time-lag modules 230 V∿ — 3
1/4	0261 91	Time-lag modules 400 V∿ — 3
1/5	0261 75	Undervoltage releases For DPX -IS 250, 630
1/5	0261 85	Undervoltage releases For DPX 250 to 1600
		Microprocessor test unit
1/3	0261 97	Test connector and software for connecting DPX to a PC Supplied with test software
		Automation control unit
		For setting the conditions for supply inversion, generator on loft status acquisition for DMX and DPX circuit-breakers, open/closed Power supply: 230 V∿ and 12-24-48 V⎓ Connection by plug-in terminals
1	0261 93	Standard unit
1	0261 94	Communicating unit, enabling data transmission (RS 485 port)

DPX™ auxiliaries
for DPX and DPX-I

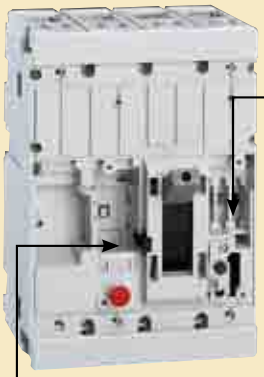

Auxiliary contact or fault signal

A single Cat.No 0261 60 auxiliary contact or fault signal

Vn	In
400 V a.c.	1.5 A
230 V a.c.	3 A
110 V a.c.	4 A
230 V d.c.	0.25 A
110 V d.c.	0.5 A
48 V d.c.	1.7A

Undervoltage releases

Vn	24V a.c./d.c.
	48V d.c.
	210V a.c.
	400V a.c.
Pw	5 VA (a.c. 50-60 Hz)
	1.6W (d.c.)
Vs (opening)	≤ 35 to 70% V∿
V (reset)	≥ 85% V∿

Shunt trip

Vn	24V a.c./d.c.
	48V a.c./d.c.
	110 to 130V a.c./d.c.
	220 to 250V a.c./d.c.
	380 to 440V a.c./d.c.
Pw	300 VA (a.c. 50-60 Hz)
	300W (d.c.)
V (working)	≥ 75% Vn

Time-lag undervoltage releases

Vn	24V a.c./d.c.
	48V d.c.
	210V a.c.
	400V a.c.
Pw	5 VA (a.c. 50-60 Hz)
	1.6W (d.c.)
Vs (opening)	≤ 35 to 70% V∿
V (reset)	≥ 85% V∿

Max. number of contacts per DPX³/DPX device

DPX/DPX3 contact	Fault signalling contact	Auxiliary contact	Shunt trip or under voltage
DPX3 160 -250 3P	1	1	1
DPX3 160- 250 4P	1	1	1UV+1ST/2ST
DPX3 160- 250 4P with I/ELM	1	1	1
DPX 250	1	2	1
DPX 630	2	2	1
DPX 1250/DPX 1600	1	3	1

earth leakage relay and coils

0260 88

0260 98

0260 93 coil for use with relay

0261 94

0261 37

Add earth leakage protection to DPX³/DPX trip-free switches and DPX³/DPX MCCBs equipped with release

Pack	Cat.Nos	Earth leakage relay for DPX/DPX-I/DPX³/DPX³-I	Number of modules
		Detects fault currents, and, when used with a shunt trip or an undervoltage release, it gives the trip command to a MCCB or a switch • Comprises: - a tinged, sealable window - an auxiliary contact - a green Led indicating energisation - 3 yellow Leds indicating respectively the max. phase earth insulation current: 20, 40 and 60 % - a red Led indicating Fixed: exceeding of the insulation fault current value Flashing: breaking of one of the connections between coils and relays • For use with coils: - Ø35 and 80 mm Adjustable sensitivity: 0.03, 0.05, 0.075, 0.1, 0.15, 0.2, 0.3, 0.5, 0.75, 1, 1.5, 2, 3, 5, 7.5, 10, 15, 20, 30 A - Ø110 to 210 mm Adjustable sensitivity: 0.3, 0.5, 0.75, 1, 1.5, 2, 3, 5, 7.5, 10, 15, 20, 30 A - Ø150 mm Adjustable sensitivity: 0.5, 0.75, 1, 1.5, 2, 3, 5, 7.5, 10, 15, 20, 30 A - Ø300 mm Adjustable sensitivity: 1, 1.5, 2, 3, 5, 7.5, 10, 15, 20, 30 A • Adjustable trip: 0, 0.15, 0.25, 0.5, 1, 2.5, 5 seconds • Supply voltage: 230/240 V - 50/60 Hz	
1/24	0260 88	Earth leakage relay to clip on rail ⊔	2

		Coils
		For use with earth leakage relay Cat.No 260 88 1 coil per DPX, DPX-I, DPX³ and DPX³-I
1/12	0260 92	Coil Ø35 mm - 160 A max.
1/10	0260 93	Coil Ø80 mm - 400 A max.
1	0260 94	Coil Ø110 mm - 600 A max.
1	0260 95	Coil Ø140 mm - 1200 A max.
1	0260 96	Coil Ø210 mm - 1800 A max.
1	0260 97	Coil Ø150 mm - open - 1200 A max.
1	0260 98	Coil Ø300 mm - open - 2000 A max.

Pack	Cat. nos.	Measurement and control of electric equipment
		Central position
1/2	0261 35	Allows you to collect all information of a line Three phase (voltage phase / neutral and phase to phase, phase currents, active and reactive powertotal active power reactive power factor) Dimensions: 4 DIN modules Power supply: 24 V ∿ / = RS 485 (2 wires)
		Microprocessor Interface
1/3	0261 37	Used to record information of a DPX microprocessor version S2 & Sg (identified currents Phase 1, 2 and 3, records of currents in neutral temperature (microprocessor card), rated current, DPX playback control) Size: 2 DIN modules Power supply: 24 V ∿ / = RS 485 (2 wires) Address, speed and coding modified hardening with kitconfi gurator
		Interface signaling and control
1/2	0261 36	Allows through 24 entries to meet the information of DPX and DPX³ / DMX³ (contact Auxiliary Position Open (1 entry) or position open and closed (2 entries), signal failure (1 entry)) and with 6 outputs to drive the circuit breakers (Controlling motor circuit breakers (2 outputs), controlling the triggers of breakers set for test (1 output)) Dimensions: 6 DIN modules Power supply: 24 V ∿ / = RS 485 (2 wires) Address, speed and coding modified hardening with kit configurator
		Kit Configurator
1/4	0261 45	To configure the card input / output and DPX interface (jumper 0-9)
		Stabilized power
1/20	**0466 23**	Connects power communication devices5 A/120 W Dimensions: 4 DIN modules

DPX³/DPX magnetic only
motor protection MCCBs up to 400 A

NEW

4207 13

For switching, remote tripping and protection of three-phase motors
Conform to IEC 60947-2

Pack	Cat.Nos	DPX³ 160
		Fixed magnetic Supplied with cage terminals 70 mm² max. (flexible cable) and up to 95 mm² max. with accessory Can be fitted with auxiliaires
		Breaking capacity Icu 16 kA (400 V∿)
	3P	In (A)
1	4207 10	16
1	4207 11	25
1	4207 12	50
1	4207 13	63
		Breaking capacity Icu 25 kA (400 V∿)
1	4207 14	16
1	4207 15	25
1	4207 16	50
1	4207 17	63

		DPX³ 250
		Adjustable magnetic Supplied with cage terminals 120 mm² max. (flexible cable) and up to 150 mm² max. with accessory Can be fitted with auxiliaires
		Breaking capacity Icu 36 kA (400 V∿)
	3P	In (A)
1	4207 18	100
1	4207 19	160
1	4207 20	200
1	4207 21	250
		Breaking capacity Icu 25 kA (400 V∿)
1	4207 22	100
1	4207 23	160
1	4207 24	200
1	4207 25	250

		DPX 630 microprocessor
		Adjustable magnetic Can be fitted with auxiliaires
		Breaking capacity Icu 36 kA (400 V∿)
	3P	In (A)
1	4207 26	320
1	4207 27	400
		Breaking capacity Icu 70 kA (400 V∿)
1	4207 28	320
1	4207 29	400

Ekinoxe™ MCCB DBs for DPX³ MCCBs

- As per IS 8623
- Available in 4, 6, 8 and 12 ways
- Fully insulated busbars and neutral bars
- Reversible doors for IP43 and IP54 distribution boards
- Provision for DPX³ 160 and DPX³ 250 MCCB as incomer and SP/TP MCBs as outgoing

DPX-I™ trip-free switches
125 to 1600 A

NEW

4202 99

0253 99

Trip-free switches for on-load circuit breaking and isolation of low voltage electrical circuits
Can be associated to earth leakage modules or to corresponding DPX earth leakage relays
Mount on rail ⊥ up to DPX³ 250 with plate Cat.No 4210 72 (DPX³-I 160) and Cat.No 4210 71 (DPX³ 250)
Conform to IEC 60947-3
Category of use AC 23 A
Connection identical to corresponding DPX

Pack	Cat.Nos 3P	Cat.Nos 4P	In (A)
	DPX³-I 160		
1	4201 98	4201 99	160
	4P with earth leakage module		
1	4201 97		160
	DPX³-I 250		
1	4202 99	4203 00	250
	4P with earth leakage module		
1	4202 98		250
	DPX-I 250		
1	0253 98	0253 99	250
	DPX-I 630		
1	0255 86	0255 87	400
1	0255 88	0255 89	630
	DPX-I 1600		
1	0257 94	0257 95	800
1	0257 96	0257 97	1250
1	0257 98	0257 99	1600

Guarantee

- The Company at its discretion, will replace products if they have any manufacturing defect within 12 months from the date of sale and 18 months from the date of manufacturing.
- The guarantee is only applicable when the products are installed as per the Company's instructions and not tampered in any manner.
- The guarantee states the Company's entire liability. It does not extend to cover consequential loss or damage or installation costs arising from defective products.

DPX-I™ trip-free switches
125 to 1600 A

Electrical characteristics

		DPX³-I 160	DPX³-I 250	DPX-I 250	DPX-I 630	DPX-I 1600
Rated operating voltage Ue (V)	50/60 Hz	690(1)	690(1)	690	690	690
	direct	250	250	250	250	250
Rated insulation voltage Ui (V∿)		800	800	690	690	690
Rated impulse withstand voltage Uimp (kV)		8	8	8	8	8
Rated closing capacity on 400 V short-circuit Icm (kA)		3	3	4.3	13	40
Short-time resistive current t = 1 s Icw (kA)		1.7	1.7	2.5	7.6	20
Endurance (o.c cycle)	mechanical	25000	25000	20000	15000	10000
	electrical	8000	8000	8000	5000	2000(2)
Conventional thermal current (A)		160	250	250	630	1600
Nominal current of use (A) AC 23 A (690 V∿)		160 (160 V)	250 (250 V)	250	630	1600
DC 23 A (250 V∿)		160	160	250	630	-

(1) 500 V for DPX³ - I with earth leakage module
(2) Up to 1250 A

Dimensions

Dimensions of DPX-I identical to corresponding DPX

DPX-I	Dimensions
DPX³-I 160	DPX³ 160 (see p. 54)
DPX³-I 250	DPX³ 250 (see p. 55)
DPX-I 250	DPX 250 (see p. 57)
DPX-I 630	DPX 630 (see p. 58)
DPX-I 1600	DPX 1600 (see p. 59)

Ekinoxe TPN DBs - 7 segment DPX³ MCCB DBs

for Lexic MCB, Isolator, RCCB and RCBO

6079 34

- As per IS 8623
- DBs with phase segregation and seperation between incomer and outgoings
- Suitable for Flush mounting and Surface mounting
- With 100 A copper busbar for each phase
- With neutral bar, earth bar and cable ties for cable management
- Fully insulated busbar and neutral bar
- Door earthing
- With provision for DPX³ 160 MCCB as incomer, DP MCB/Isolator/ RCCB/RCBO as subincomer and SP MCBs as outgoing

Pack	Cat. nos.	IP 20 - IK 08	Nos. of modules
1	6079 28	4 Way	DPX³ 160+12+12
1	6079 30	6 way	DPX³ 160+18+12
1	6079 31	8 way	DPX³ 160+24+12
1	6079 32	12 way	DPX³ 160+36+12
		IP 42 - IK 09 with metal door	
1	6079 33	4 Way	DPX³ 160+12+12
1	6079 34	6 Way	DPX³ 160+18+12
1	6079 35	8 Way	DPX³ 160+24+12
1	6079 36	12 Way	DPX³ 160+36+12

NEW

EkinoxeTPN DBs - DPX³ 160 MCCB DBs

for Lexic MCB

6079 14

6079 17

- As per IS 8623
- Suitable for Flush mounting and Surface mounting
- With 250 A copper busbar
- With 2 neutral bars, 2 earth bars and cable ties for cable management
- Fully insulated busbar and neutral bar
- Door earthing
- Corner sheilds for better protection
- Pan assembly for ease of installation
- Masking sheet
- Reversible doors for IP 43 & IP 54 DBs
- With provision for DPX³ 160 MCCB as incomer and SP / TP MCBs as outgoing

Pack	Cat. nos.	IP 20 - IK 08	Nos. of modules
1	6079 10	4 Way	DPX³ 160+12
1	6079 11	8 way	DPX³ 160+24
1	6079 12	12 way	DPX³ 160+36
		IP 43 - IK 09 with metal door	
1	6079 13	4 Way	DPX³ 160+12
1	6079 14	8 Way	DPX³ 160+24
1	6079 15	12 Way	DPX³ 160+36
		IP 54 - IK 09	
1	6079 16	4 Way	DPX³ 160+12
1	6079 17	8 Way	DPX³ 160+24
1	6079 18	12 way	DPX³ 160+36

Note : for dimensional details please refer to the dimenisions of Ekninoxe MCCB DB

Bold catalogue numbers are products normally available with Legrand (India) stockists. **Cat. nos. that are not bold** - delivery within 4 - 8 weeks from the date of order.
Bold packing quantity is our mandatory packing. Orders to be placed by Legrand (India) stockists in multiples of the same.
Red catalogue numbers: New products

Ekinoxe TPN DBs - DPX³ 250 MCCB DBs

for Lexic MCB

NEW

6079 23

6079 26

- As per IS 8623
- Suitable for Flush mounting and Surface mounting
- With 250 A copper busbar
- With 2 neutral bars, 2 earth bars and cable ties for cable management
- Fully insulated busbar and neutral bars
- Door earthing
- Corner sheilds for better protection
- Pan assembly for ease of installation
- Masking sheet
- Reversible doors for IP 43 & IP 54 DBs
- With provision for DPX³ 250 MCCB and SP / TP MCBs as outgoing

Pack	Cat. nos.		Nos. of modules
		IP 20 - IK 08	
1	6079 19	4 Way	DPX³ 250+12
1	6079 20	8 way	DPX³ 250+24
1	6079 21	12 way	DPX³ 250+36
		IP 43 - IK 09 with metal door	
1	6079 22	4 Way	DPX³ 250+12
1	6079 23	8 Way	DPX³ 250+24
1	6079 24	12 Way	DPX³ 250+36
		IP 54 - IK 09	
1	6079 25	4 Way	DPX³ 250+12
1	6079 26	8 Way	DPX³ 250+24
1	6079 27	12 way	DPX³ 250+36

Ekinoxe Metal One way enclosures

for DPX³ 160 & DPX³ 250 MCCB

6079 44

- As per IS 8623
- For independent mounting of DPX³ 160 and DPX³ 250 MCCB
- IK 08

Pack	Cat. nos.	**IK 08**	Nos. of modules
1	6079 44	DPX³ 160 MCCB enclosure	3P & 4 P
1	6079 45	DPX³ 250 MCCB enclosure	3P & 4 P

Note : for dimensional details pls refer to the dimenisions of Ekninoxe MCCB DB

Bold catalogue numbers are products normally available with Legrand (India) stockists. **Cat. nos. that are not bold** - delivery within 4 - 8 weeks from the date of order.
Bold packing quantity is our mandatory packing. Orders to be placed by Legrand (India) stockists in multiples of the same.
Red catalogue numbers: New products

DPX³ 160 thermal magnetic

Dimensions

Fixed version

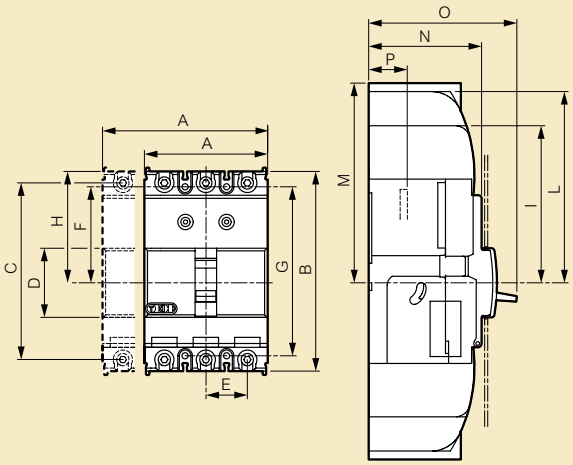

	A	B	C	D	E	F	G	H	I	L	M	N	O	P
3P	81	130	115	45	27	62,5	110	72,5	102,5	125	-	74	100	18
4P	108	130	115	45	27	62,5	110	72,5	102,5	125	-	74	100	18
e.l.m.	108	160	145	45	27	62,5	140	72,5	102,5	125	-	74	100	18

Fixed version with earth leakage module

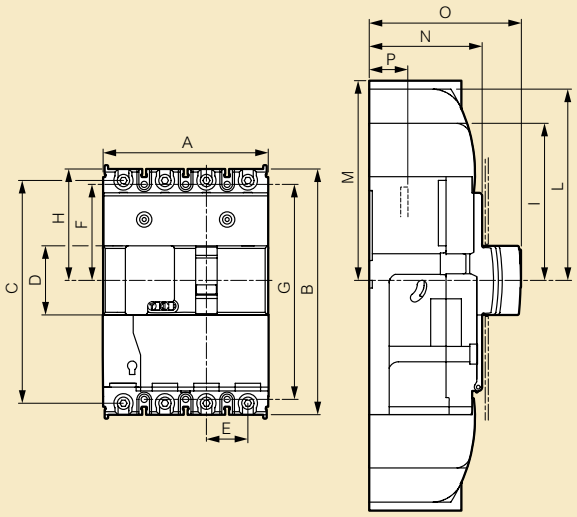

Plug-in version

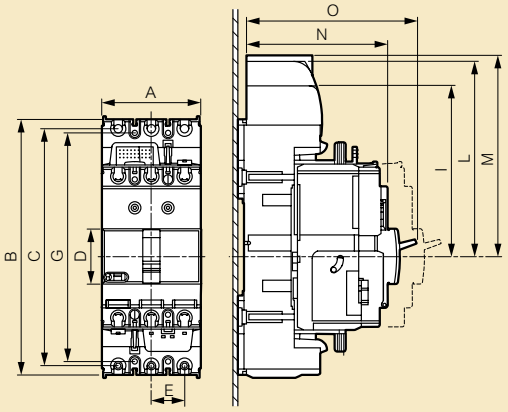

	A	B	C	D	E	F	G	H	I	L	M	N	O	P
3P	81	208	193	45	27	100,5	186	111,5	141,5	164	-	122	148	-
4P	108	238	223	45	27	100,5	216	111,5	141,5	164	-	122	148	-
e.l.m.	108	230	223	45	27	100,5	216	111,5	141,5	164	-	122	148	-

Plug-in version with earth leakage module

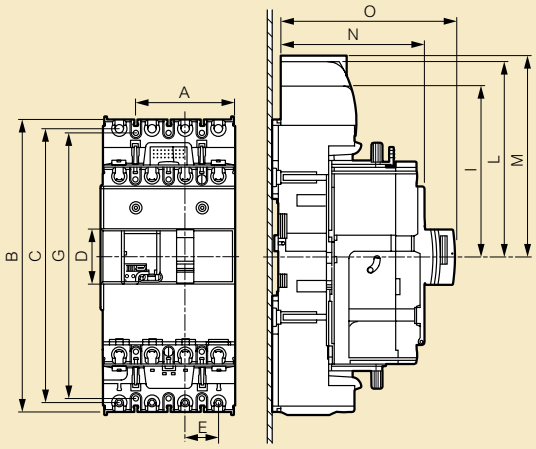

All dimensions are in mm
1 inch = 25.4mm
Accuracy of dimensions = ± 2mm

DPX³ 250 thermal magnetic and microprocessor release

Dimensions

Fixed version

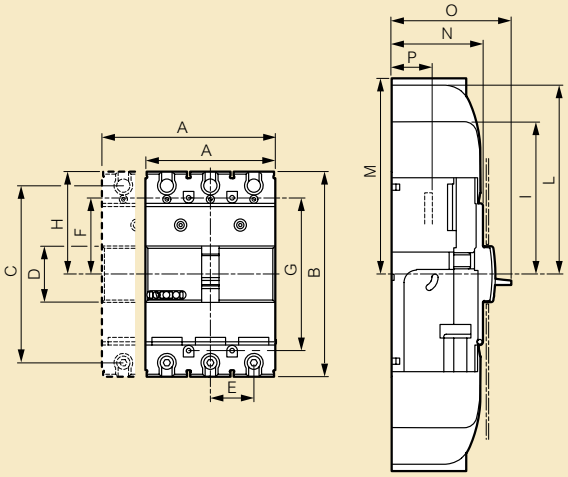

Fixed version with earth leakage module

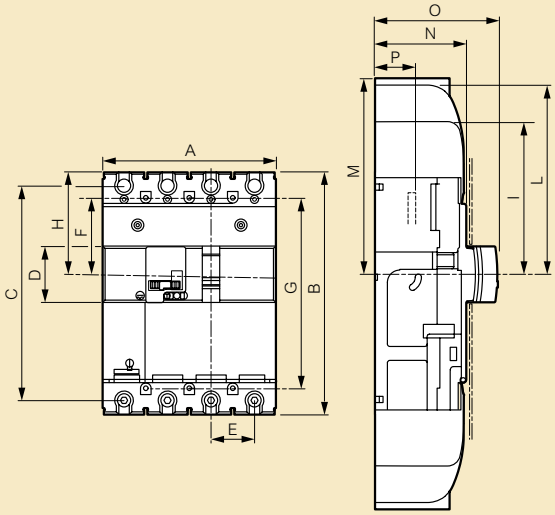

	A	B	C	D	E	F	G	H	I	L	M	N	O	P
3P	105	165	142,5	45	35	61,5	123	82,5	112,5	150	-	74	100	18
4P	140	165	142,5	45	35	61,5	123	82,5	112,5	150	-	74	100	18
e.l.m.	140	195	172,5	45	35	61,5	153	82,5	112,5	150	-	74	100	18

Plug-in version

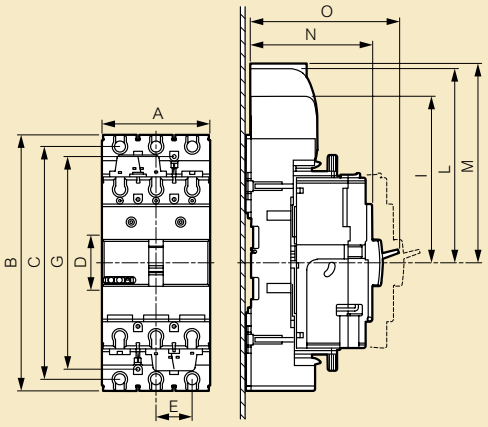

Plug-in version with earth leakage module

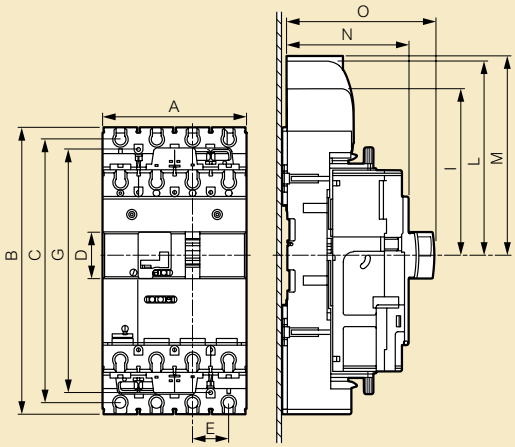

	A	B	C	D	E	F	G	H	I	L	M	N	P
3P	105	248	225,5	45	35	103	206	150	180	217,5	-	122	148
4P	140	278	225,5	45	35	103	236	150	180	217,5	-	122	148
e.l.m.	140	278	225,5	45	35	103	236	150	180	217,5	-	122	148

All dimensions are in mm
1 inch = 25.4mm
Accuracy of dimensions = ± 2mm

Dimensions

Direct rotary handles Cat.Nos 4210 00/001/002/003

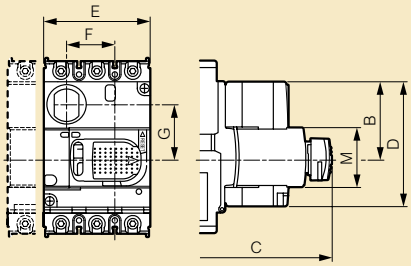

Vari-depth rotary handles Cat.Nos 4210 04/005

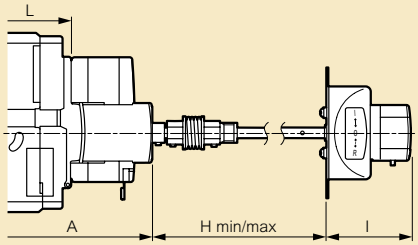

	A	B	C	D	E	F	G	H min	H max	I	L	M
160	122	57	155	94	80,5	36,5	41,7	132	361	62	74	45
160 with e.l.m.	122	57	155	94	93	36,5	41,7	132	361	62	74	45
250	122	57	155	94	80,5	40,5	41,7	132	361	62	74	45
250 with e.l.m.	122	57	155	94	93	40,5	41,7	132	361	62	74	45
250 microprocessor release	122	57	155	94	93	40,5	41,7	132	361	62	74	45
250 microprocessor release with e.l.m.	122	57	155	94	93	40,5	41,7	132	361	62	74	45

Front motor-driven handle Cat.No 4210 61

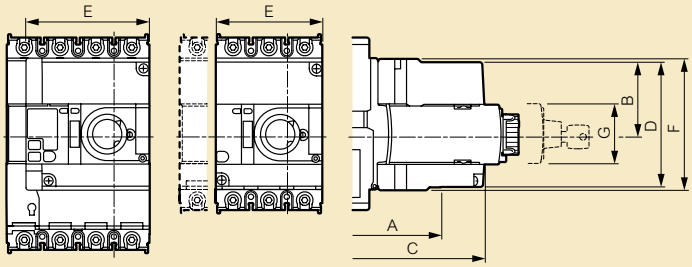

	A	B	C	D	E	F	G	H
160	125	54,5	154	94	80,5	99	45	74
160 with e.l.m.	125	54,5	154	94	93	99	45	74
250	125	54,5	154	94	80,5	99	45	74
250 with e.l.m.	125	54,5	154	94	93	99	45	74
250 microprocessor release	125	54,5	154	94	93	99	45	74
250 microprocessor release with e.l.m.	125	54,5	154	94	93	99	45	74

Rear terminals Cat.Nos 4210 36/037/038/039

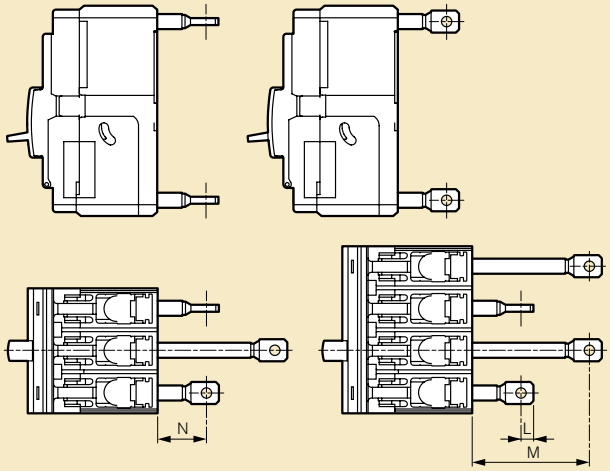

All dimensions are in mm
1 inch = 25.4mm
Accuracy of dimensions = ± 2mm

DPX™ 250 thermal magnetic & microprocessor release

■ Dimensions

Fixed version, front terminals

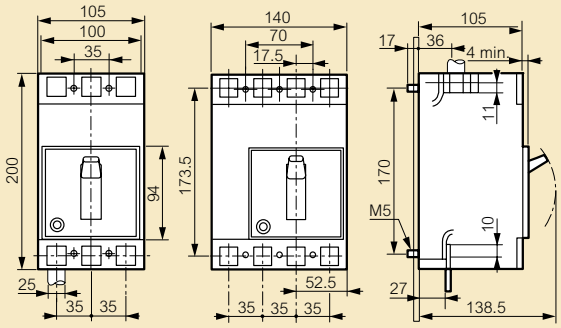

Fixed version with earth leakage module mounted underneath(1)

Front terminals — Rear terminals

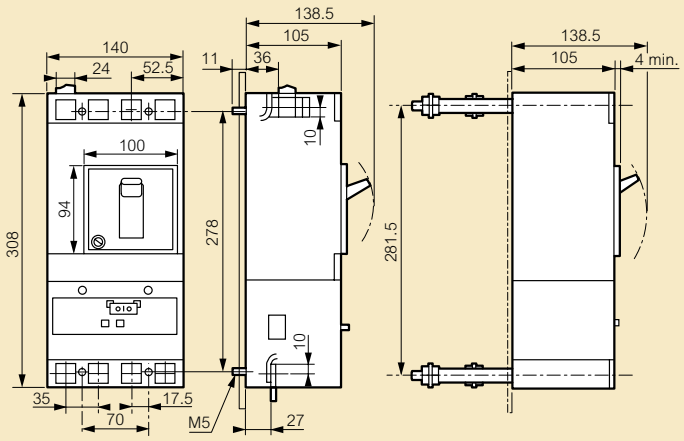

Plug-in version, front terminals

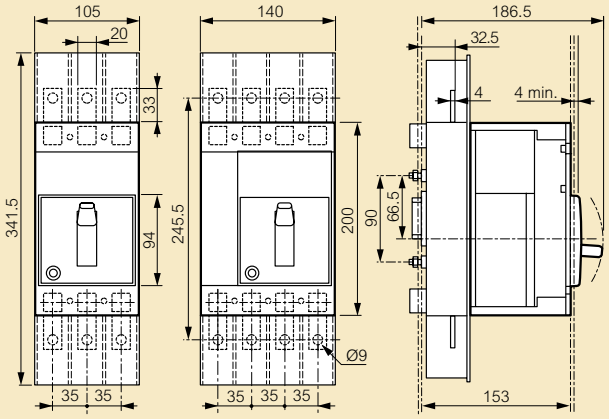

Plug-in version, rear terminals

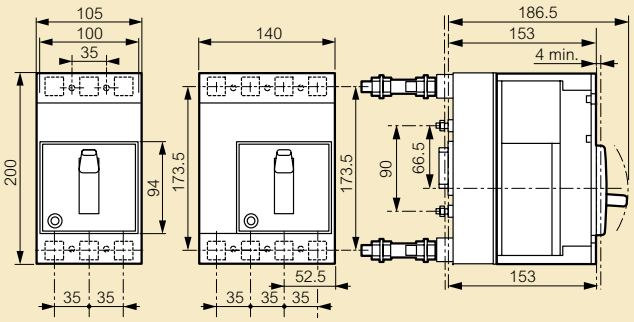

Draw-out version, front terminals

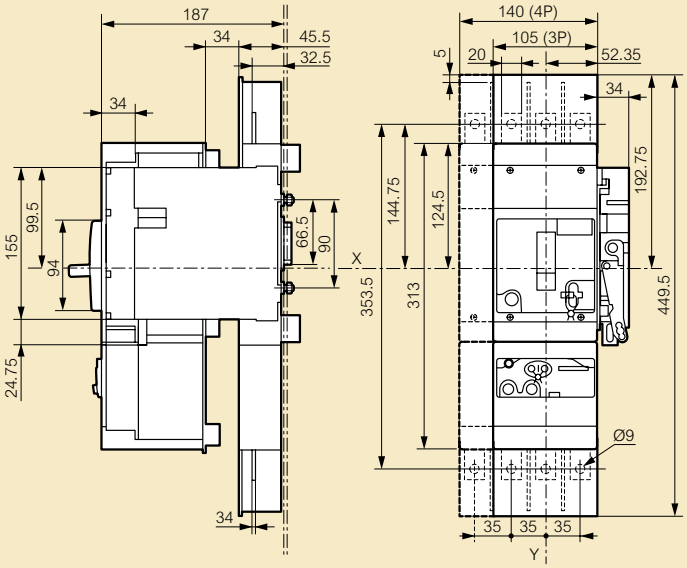

Draw-out version, rear terminals

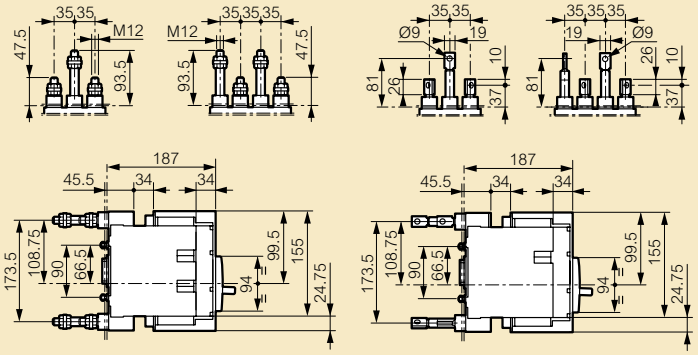

Rotary handle-direct on DPX

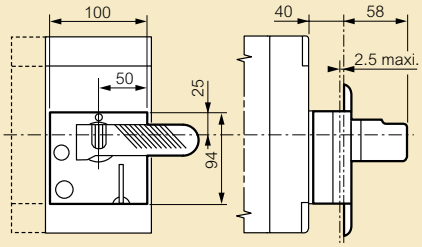

Terminal shields

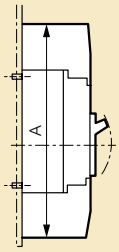

	A
DPX 250	330
DPX 250 + earth leakage module	438

Rotary handle-vari-depth on door

Mounting with flexible seal

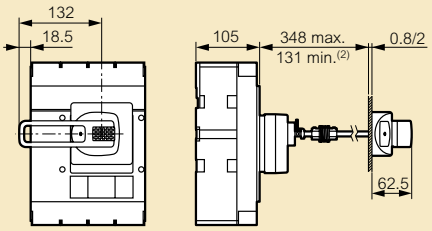

(1) Dimensions of 3-pole earth leakage modules are the same as 4-pole earth leakage modules
(2) 75 mm without mechanical system

All dimensions are in mm
1 inch = 25.4mm
Accuracy of dimensions = ± 2mm

DPX™ 630 thermal magnetic & microprocessor release

■ Dimensions

Fixed version, front terminals

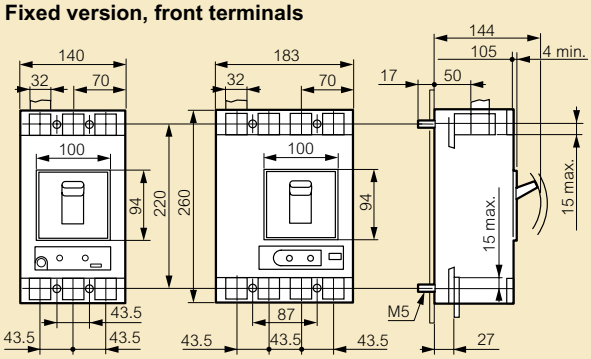

Fixed version with earth leakage module mounted underneath

Front terminals Rear terminals

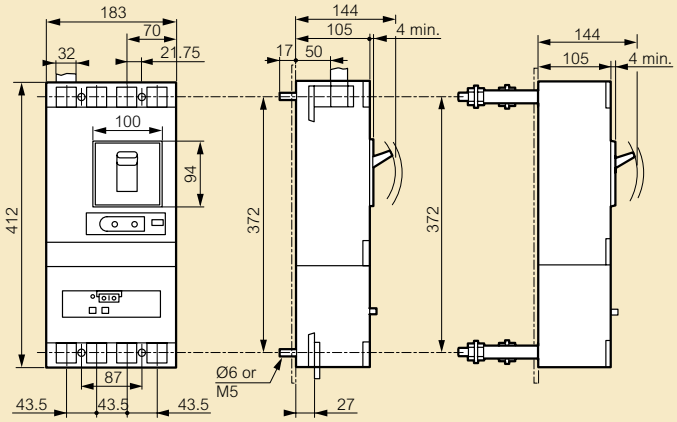

Plug-in version, front terminals

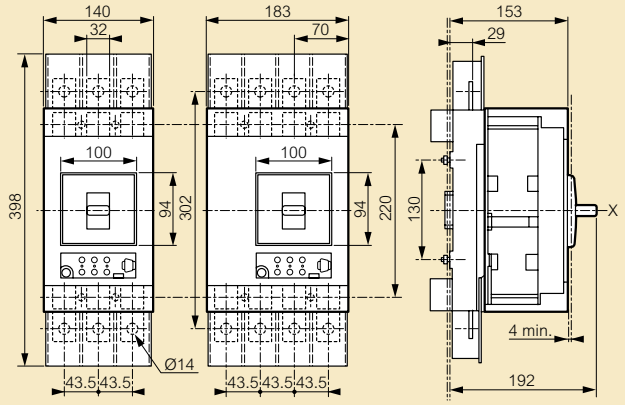

Plug-in version, rear terminals

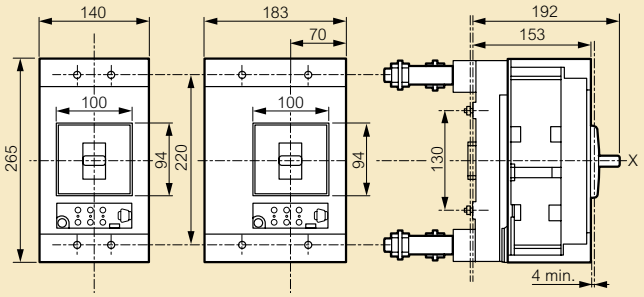

Draw-out version, front terminals

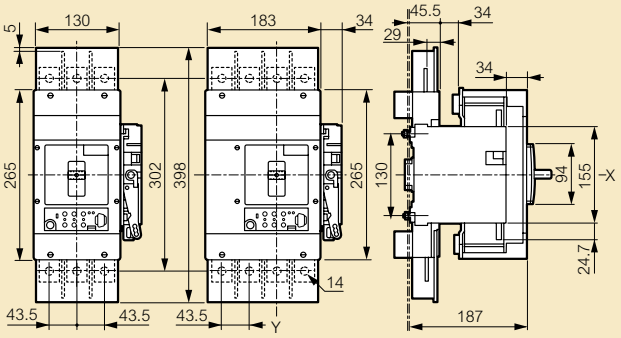

Draw-out version, rear terminals

Rear terminal with threaded rod

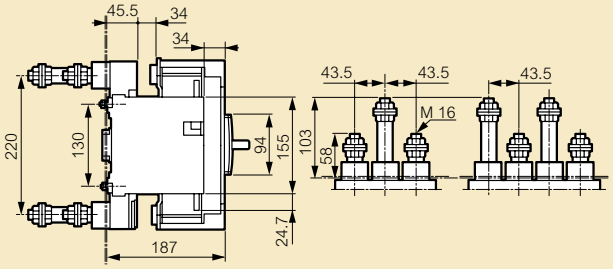

Flat rear terminal

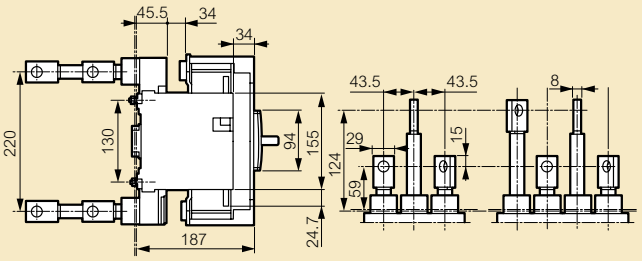

Rotary handle-direct on DPX

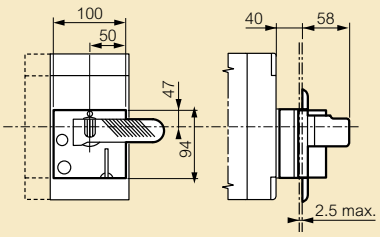

Terminal shields

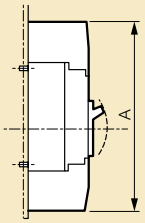

	A
DPX 630	390
DPX 630 + earth leakage module	542

Rotary handle-vari-depth handle on door

Mounting with flexible seal

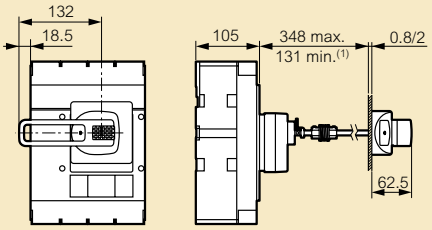

(1) 75 mm without mechanical system

All dimensions are in mm
1 inch = 25.4mm
Accuracy of dimensions = ± 2mm

DPX™ 1250/1600 thermal magnetic & microprocessor release

■ Dimensions

Fixed version, front terminals

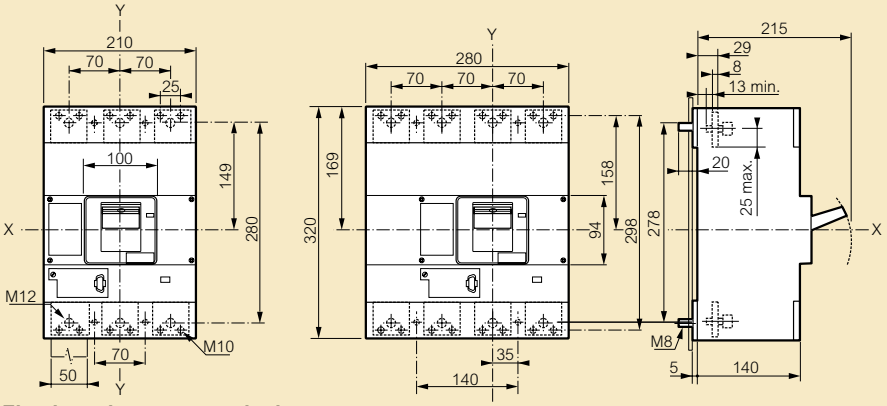

Fixed version, rear terminals

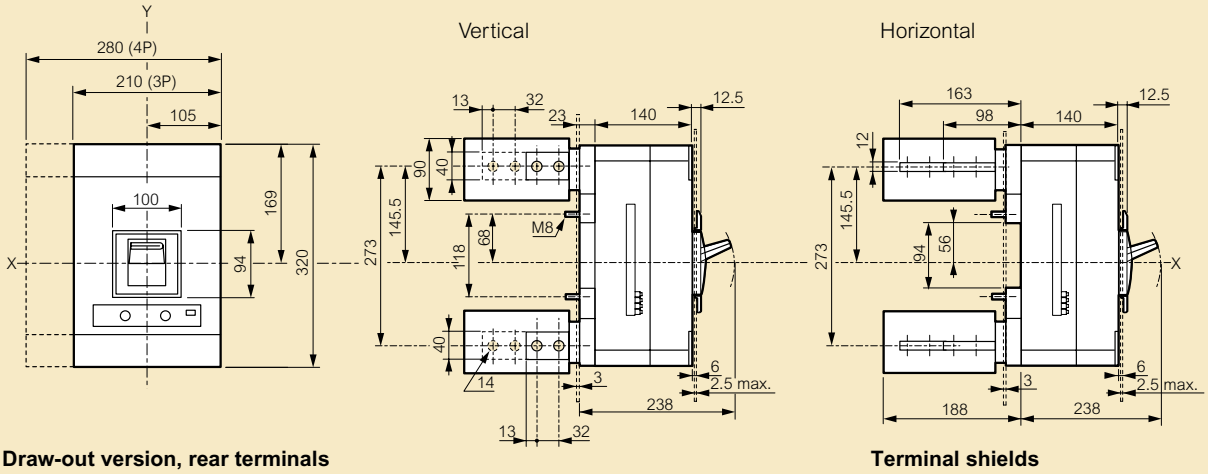

Draw-out version, rear terminals

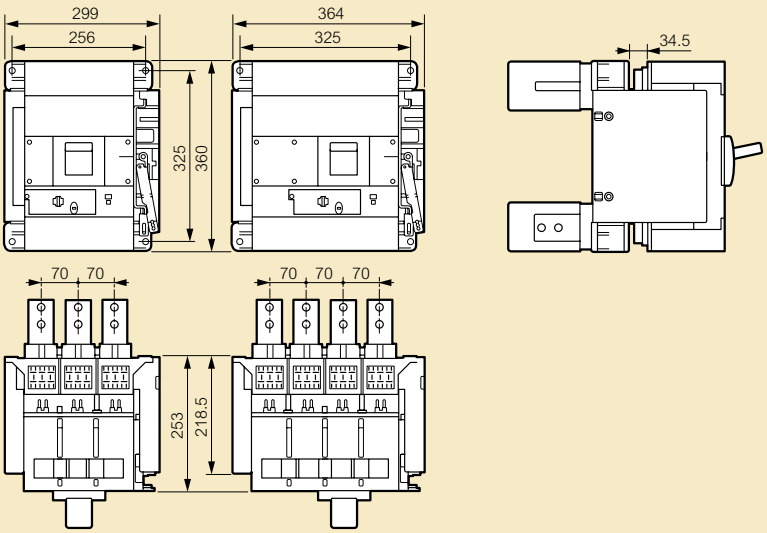

Terminal shields

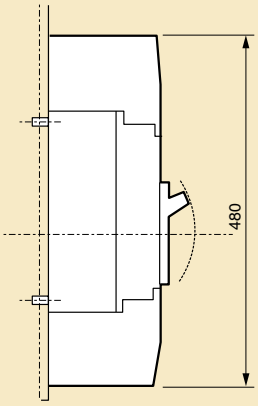

Rotary handle-direct on DPX

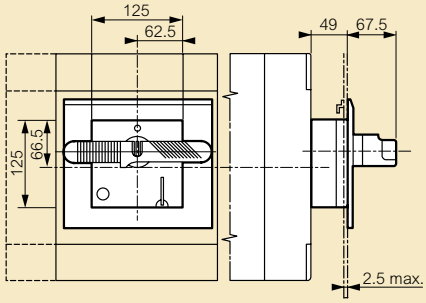

Rotary handle-vari-depth handle on door

Mounting with flexible seal

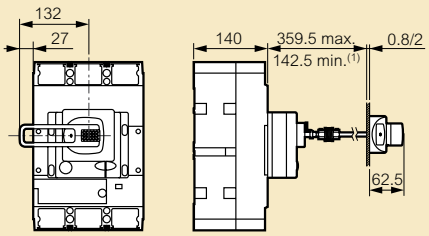

(1) 75 mm without mechanical system

All dimensions are in mm
1 inch = 25.4mm
Accuracy of dimensions = ± 2mm

earth leakage relay and coils

■ Earth leakage relay

Cat.No 0260 88

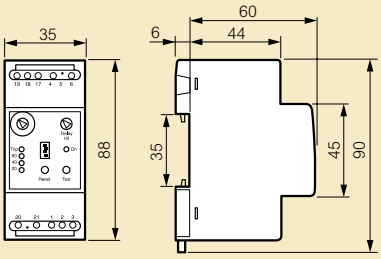

Cat.No 0260 98

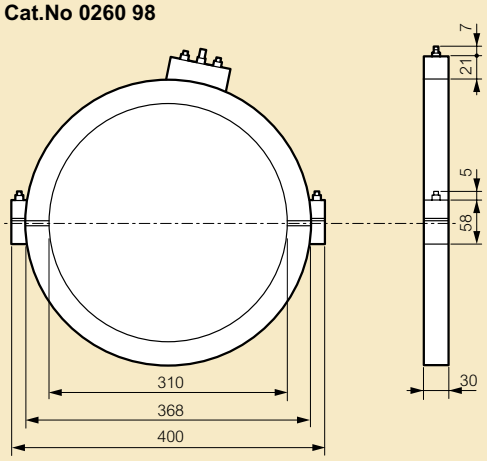

■ Coils

Cat.Nos 0260 92/93/94/95/96

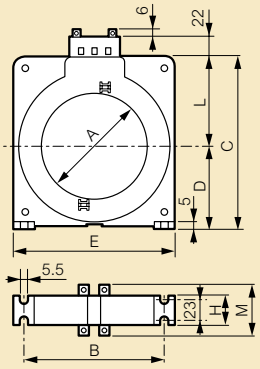

Cat.No 0260 97

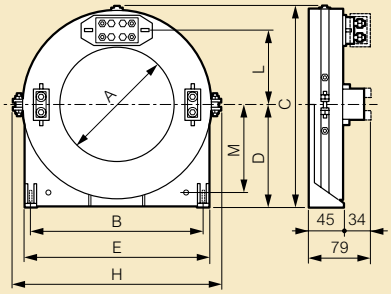

Cat.Nos	A	B	C	D	E	H	L	M
0260 92	35	75	85	42	92	36	43	56
0260 93	80	108	132	67	125	36	65	56
0260 94	110	148	170	86	165	36	84	56
0260 95	140	177	206	104	200	36	102	56
0260 96	210	270	295	150	290	44	145	64
0260 97	150	225	259	133	245	275	95	113

All dimensions are in mm
1 inch = 25.4mm
Accuracy of dimensions = ± 2mm

DPX³ /DPX MCCBs
spreader links

■ Dimensions

DPX³ MCCB 160A TP

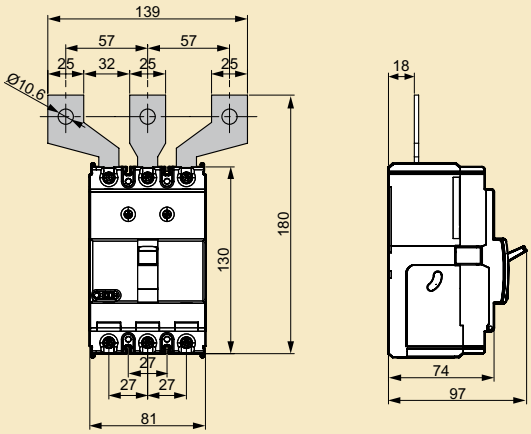

DPX³ MCCB 160A FP

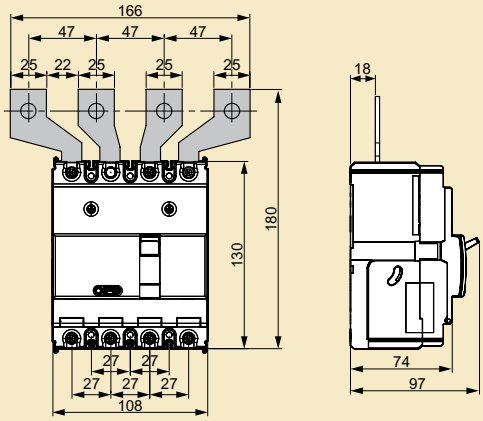

DPX³ MCCB 250A TP

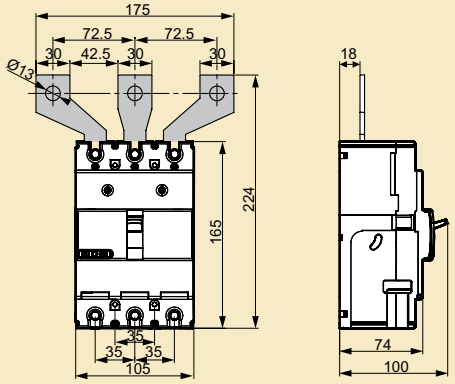

DPX³ MCCB 250A FP

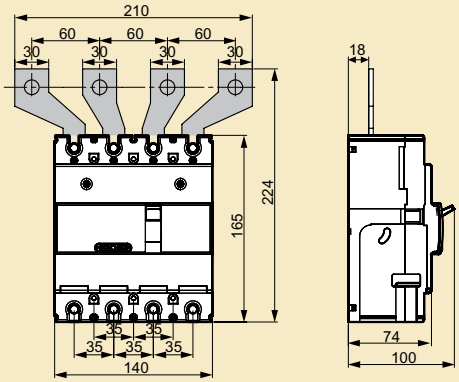

DPX 250 TP

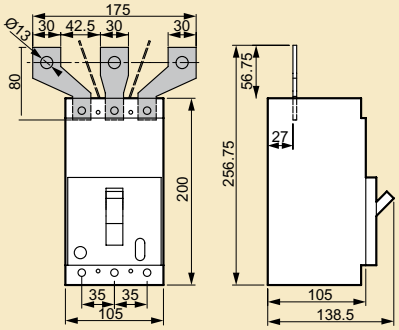

DPX 250 FP

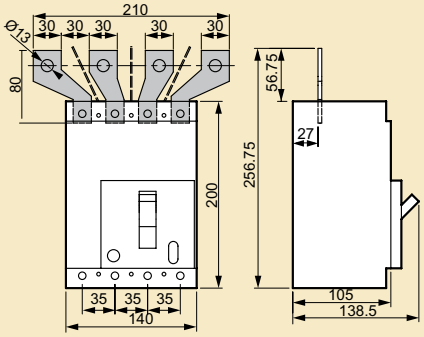

DPX 400-630 TP

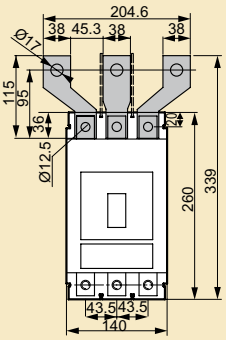

DPX 400-630 FP

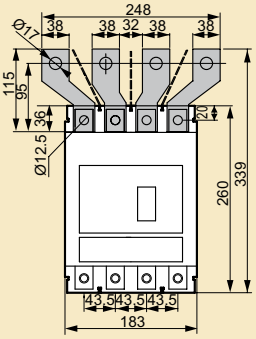

All dimensions are in mm
1 inch = 25.4mm
Accuracy of dimensions = ± 2mm

DPX³ 160/250

■ Technical characteristics (at 40°)

MCCBs		DPX³ 160 thermal magnetic				DPX³ 160 with electronic earth leakage module			
		16 kA	25 kA	36 kA	50 kA	16 kA	25 kA	36 kA	50 kA
Nominal current In (A)		16-25-40-63-80-100-125-160				16-25-40-63-80-100-125-160			
Rated insulation voltage (V)	50-60Hz	800				600			
Rated operational voltage (V)	50-60Hz	690				500			
	DC	500				500			
Rated impulse withstand current Uimp (kV)		8				8			
Category of use		A				A			
Ultimate breaking capacity Icu (kA) in AC	220/240 V∿	25	35	50	65	25	35	50	65
	380/415 V∿	16	25	36	50	16	25	36	50
	440 V∿	10	18	25	30	10	18	25	30
	480/500 V∿	8	10	12	15	8	10	12	15
	690 V∿	5	5	8	10	5	5	8	10
Ultimate breaking capacity Icu (kA) in DC	125 V⎓ (1)	32	50	60	80	32	50	60	80
	250 V⎓ (1)	16	25	30	40	16	25	30	40
	400 V⎓ (2)	16	25	30	40	16	25	30	40
	500 V⎓ (2)	10	20	25	35	10	20	25	35
Service breaking capacity Ics (% Icu)		100	100	100	100	100	100	100	100
Short-circuit making capacity Icm (kA)	415 V∿	32	52,5	75,6	105	32	52,5	75,6	105

MCCBs		DPX³ 250 thermal magnetic				DPX³ 250 microprocessor release			
		25 kA	36 kA	50 kA	70 kA	25 kA	36 kA	50 kA	70 kA
Nominal current In (A)		100-160-200-250				40-100-160-250			
Rated insulation voltage (V)	50-60Hz	800 (with integrated e.l.m.: 500)				800 (with integrated e.l.m.: 600)			
Rated operational voltage (V)	50-60Hz	690 (with integrated e.l.m.: 500)				690 (with integrated e.l.m.: 500)			
	DC	500				500			
Rated impulse withstand current Uimp (kV)		8				8			
Category of use		A				A			
Ultimate breaking capacity Icu (kA) in AC	220/240 V∿	40	60	80	100	40	60	80	100
	380/415 V∿	25	36	50	70	25	36	50	70
	440 V∿	20	30	40	60	20	30	40	60
	480/500 V∿	10	25	30	40	10	25	30	40
	690 V∿	8	16	18	20	8	16	-	20
Ultimate breaking capacity Icu (kA) in DC	125 V⎓ (1)	50	72	80	90	50	72	80	90
	250 V⎓ (1)	25	36	40	45	25	36	40	45
	400 V⎓ (2)	30	45	50	55	30	45	50	55
	500 V⎓ (2)	25	36	40	45	25	36	40	45
Service breaking capacity Ics (% Icu)		100	100	100	100	100	100	100	100

■ Temperature derating

DPX³ 160

In (A)	Temperature (°C)											
	-25	-20	-10	-5	0	10	20	30	40	50	60	70
16	23	22	21	21	20	19	18	17	16	15	15	14
25	37	35	34	33	32	30	28	26	25	23	22	21
40	55	54	52	51	50	47	43	42	40	38	36	34
63	88	87	84	83	81	76	69	66	63	60	57	55
80	115	113	111	109	107	97	87	84	80	78	75	72
100	135	133	130	123	115	108	100	100	100	95	90	85
125	160	158	155	153	150	138	125	125	125	118	112	105
160	224	221	214	210	205	192	176	168	160	152	145	139

DPX³ 250

In (A)	Temperature (°C)											
	-25	-20	-10	-5	0	10	20	30	40	50	60	70
40	54	53	51	50	49	48	45	41	40	38	36	34
100	135	132	128	126	123	120	112	102	100	94	90	84
160	216	211	205	201	197	192	179	163	160	151	143	134
200	270	264	256	251	246	240	224	203	200	189	179	168
250	338	330	320	314	308	300	280	254	250	236	224	210

■ Derating at different altitudes

Altitude (m)		2000	3000	4000
Rated current (A)		1 x In	0,96 x In	0,93 x In
Rated voltage (V)	DPX³ no e.l.m.	690	690	550
	DPX³ with e.l.m.	500	500	400

Power loss per pole for DPX³

Rear terminals	In (A)									
	16	25	40	63	80	100	125	160	200	250
DPX³ 160 (W)	2.8	5	5.1	6.7	7	11	12.5	15.4	-	-
DPX³ 160 + earth leakage (W)	2.8	5	5.1	6.7	7	11	12.5	15.4	-	-
DPX³ 250 ELE (W)	-	-	0.3	-	-	-	-	2	5.1	12.5
DPX³ 250 ELE + earth leakage (W)	-	-	0.5	-	-	-	-	3	7.7	18.8
DPX³ 250 TM (W)	-	-	-	-	-	8.1	-	15.1	22.8	29.4
DPX³ 250 TM + earth leakage (W)	-	-	-	-	-	9.2	-	17.4	25.6	37.5

(1) 2 poles in series
(2) 3 poles in series

DPX³ 160/250 (continued)

■ Technical data

Power loss per pole for DPX circuit breakers

Circuit breakers	Rated current In (A)																
	16	25	40	63	100	125	160	200	250	320	400	500	630	800	1000	1250	1600
DPX/DPX-H/DPX-L250	-	-	-	7.50	-	14.08	-	15.63	-	-	-	-	-	-	-	-	-
DPX/DPX-H/DPX-L630	-	-	-	-	-	2.97	-	-	-	18.56	-	46.04	-	-	-	-	-
DPX/DPX-H/DPX-L1250	-	-	-	-	-	-	-	-	-	-	-	15.88	25.60	35.00	54.69	54.69	-
DPX/DPX-H1600	-	-	-	-	-	-	-	-	-	-	-	-	13.89	22.40	46.88	46.88	76.80

Power loss per pole for DPX earth leakage modules (W)

Size 250	-	0.02	0.05	0.12	0.30	-	0.77	-	1.88	-	-
Size 630	-	-	-	-	-	-	-	-	1.25	2.05	3.20

Tightening torque for MCCBs in Nm

DPX 250 ER to 400 A with connected earth leakage modules, take the tightening torque values on the connector plate; for DPX 125 A, take the tightening torque values on the terminals.

	Max. tightening torque on connection plate	Max. tightening torque on terminals
DPX³ 160	7	8
DPX³ 250	10	12
DPX 250	15	15
DPX 630	24	36
DPX 1600	25	50

Required clearance in an installation

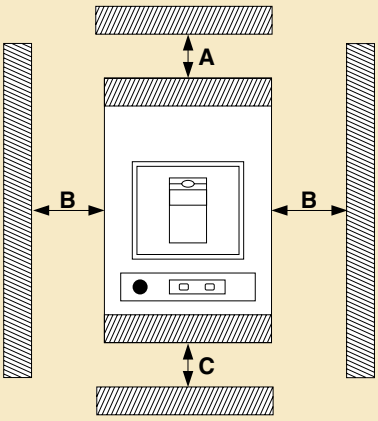

Circuit breakers	From wall to earth	from side to wall earth	From wall to earth
DPX³ 160	60	20	20
DPX³ 250	60	20	20
DPX 250	70	25	25
DPX 630	70	25	25
DPX 1250	90	40	40
DPX 1600	90	40	40

Where not indicated distances are considered as zero

■ DPX³ 160 thermal-magnetic Tripping curve

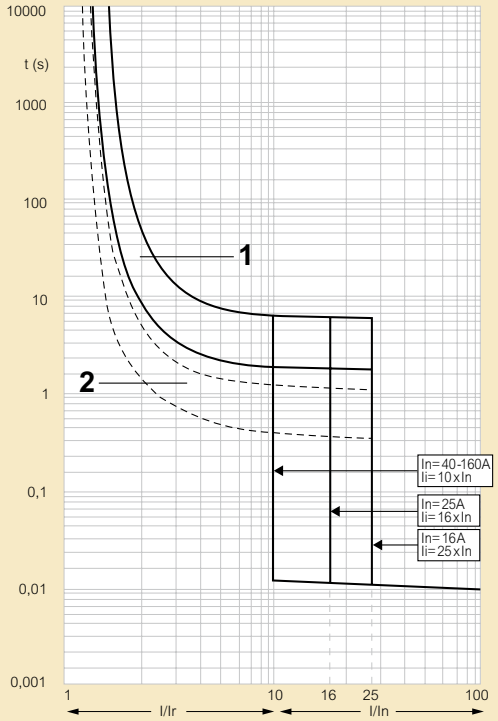

t: time
I: rated current
Ir: setting current
Curve n°1: charateristic with cold start
Curve n°2: charateristic with hot start

DPX³ 160/250 (continued)

■ DPX³ 160 thermal-magnetic current limitation curves

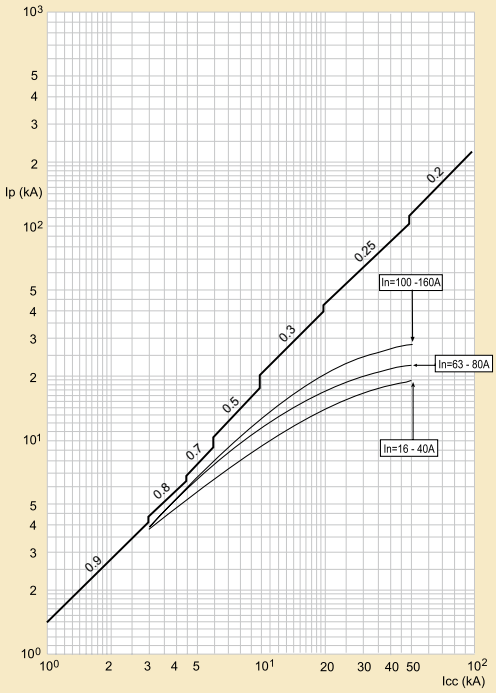

Isc = prospective short circuit symmetrical current (RMS value)
Ip = maximum short circuit peak current
– maximum prospective short circuit peak current corresponding at the power factor
– maximum real peak short circuit current

■ DPX³ 160 thermal-magnetic thermal stress limitation curves

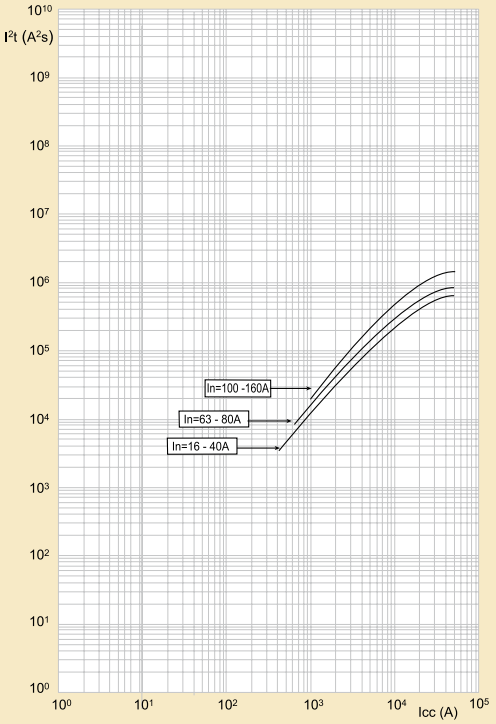

Isc = prospective short circuit symmetrical current (RMS value)
I²t = let - through energy

■ DPX³ 160 thermal-magnetic with integrated e.l.m. Tripping curves

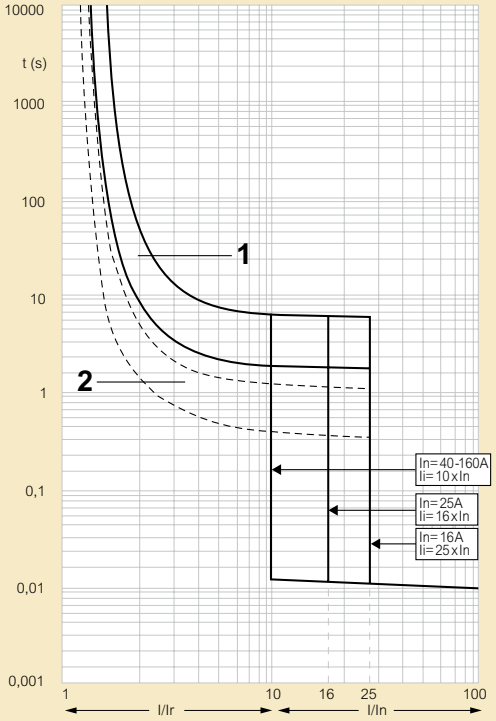

t: time
I: rated current
Ir: setting current
Curve n°1: charateristic with cold start
Curve n°2: charateristic with hot start

■ DPX³ 160 thermal-magnetic with integrated e.l.m current limitation curves

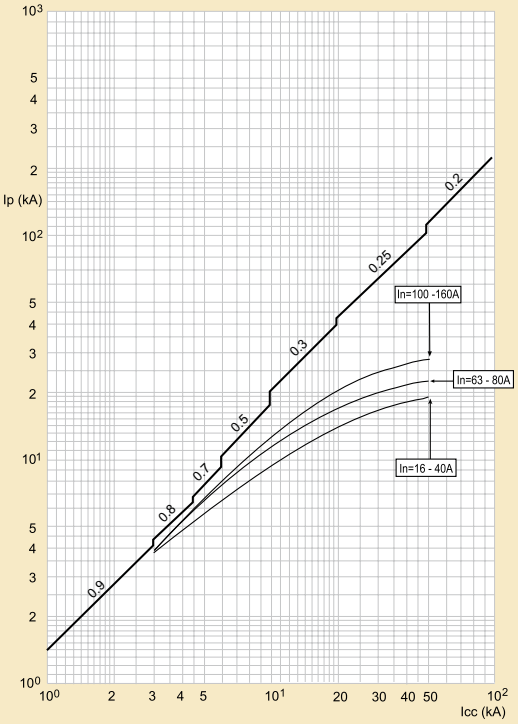

Isc = prospective short circuit symmetrical current (RMS value)
Ip = maximum short circuit peak current
– maximum prospective short circuit peak current corresponding at the power factor
– maximum real peak short circuit current

DPX³ 160/250 (continued)

■ DPX³ 160 thermal-magnetic with integrated e.l.m. thermal stress limitation Curves

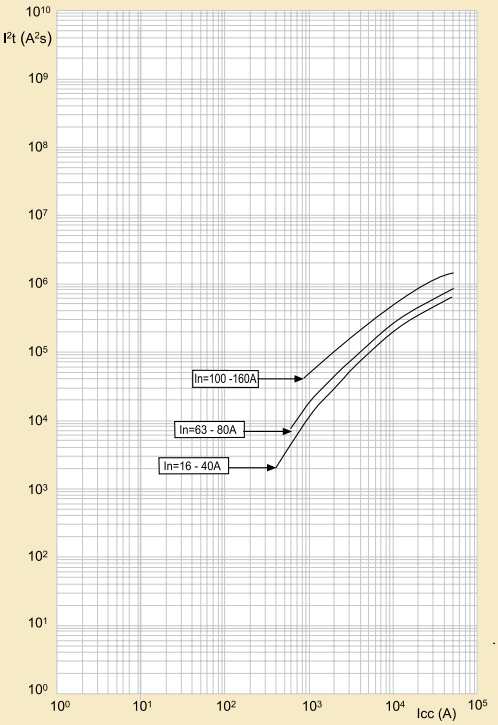

Isc = prospective short circuit symmetrical current (RMS value)
I²t = let - through energy

■ DPX³ 250 thermal-magnetic Tripping curves

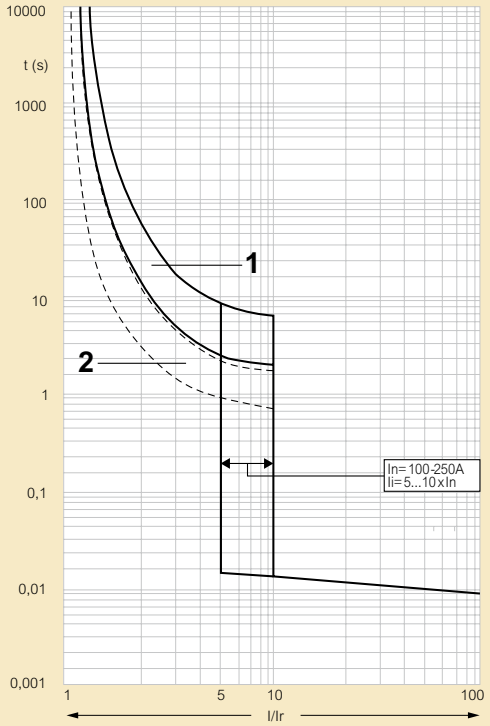

t: time
I: rated current
Ir: setting current
Curve n°1: charateristic with cold start
Curve n°2: charateristic with hot start

■ DPX³ 250 thermal-magnetic current limitation curves

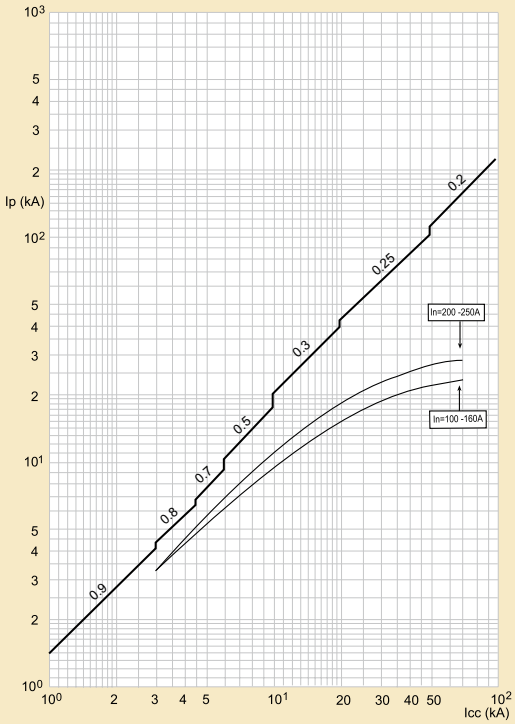

Isc = prospective short circuit symmetrical current (RMS value)
Ip = maximum short circuit peak current
– maximum prospective short circuit peak current corresponding at the power factor
– maximum real peak short circuit current

■ DPX³ 250 thermal-magnetic thermal stress limitation curves

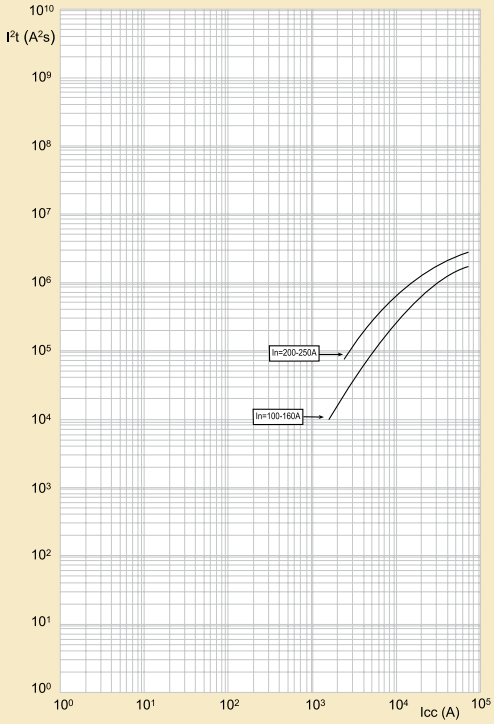

Isc = prospective short circuit symmetrical current (RMS value)
I²t = let - through energy

DPX³ 160/250 (continued)

■ DPX³ 250 thermal-magnetic with integrated e.l.m Tripping curves

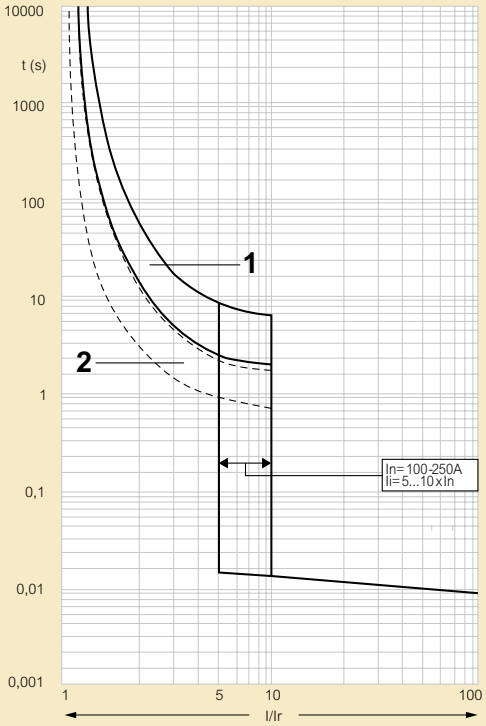

t: time
I: rated current
Ir: setting current

■ DPX³ 250 thermal-magnetic with integrated e.l.m current limitation curves

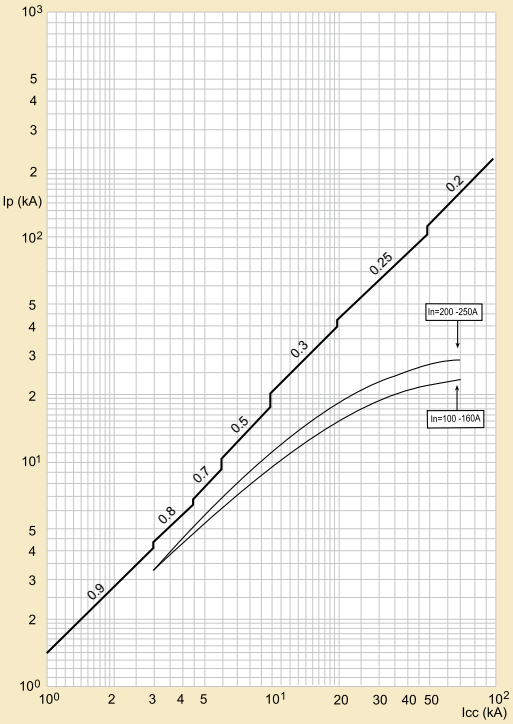

Isc = prospective short circuit symmetrical current (RMS value)
Ip = maximum short circuit peak current
– maximum prospective short circuit peak current corresponding at the power factor
– maximum real peak short circuit current

■ DPX³ 250 thermal-magnetic with integrated e.l.m. thermal stress limitation curves

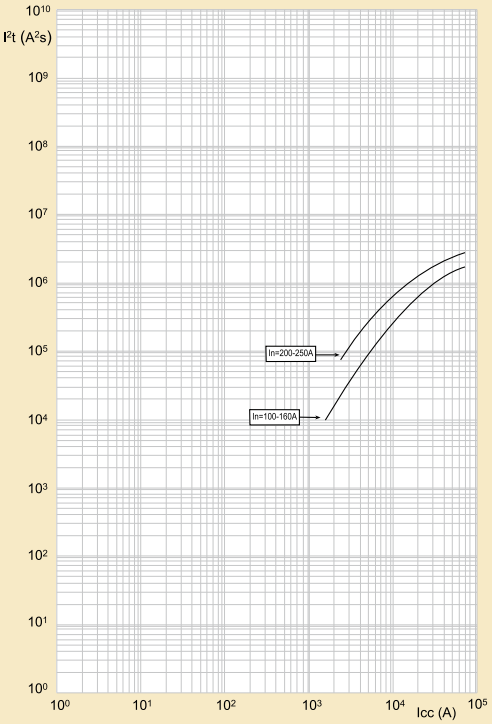

Isc = prospective short circuit symmetrical current (RMS value)
I²t = let - through energy

■ DPX³ 160/250 - earth leakage characteristics

DPX³ 160 – 16-25-36-50kA, Imax = 160A

DPX³ 250 – 25-36-50-70kA, Imax = 250A

Instantaneous

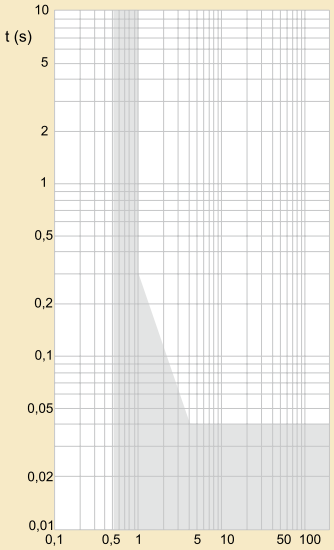

Time delay : 0.3s

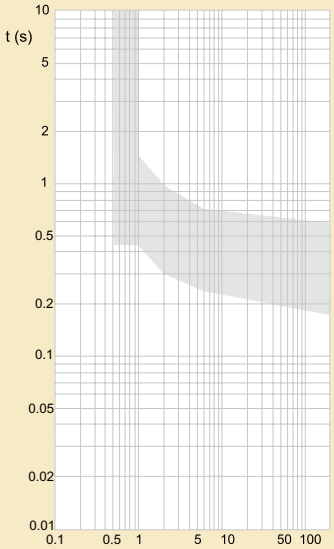

DPX³ 160/250 (continued)

■ DPX³ 160/250 - earth leakage characteristics

DPX³ 160 – 16-25-36-50kA, Imax = 160A

DPX³ 250 – 25-36-50-70kA, Imax = 250A

Time delay : Is

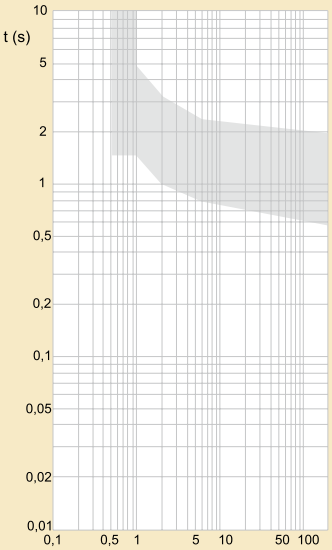

Time delay : 3s

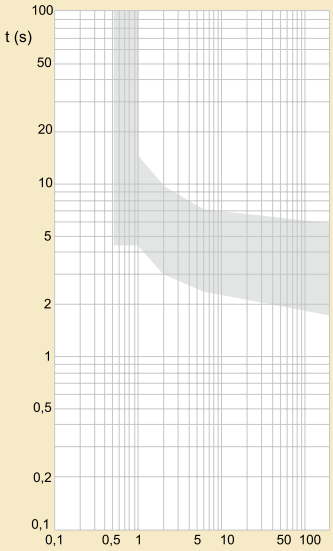

IΔn = 0.03 - 0.3 - 1 - 3A
I / IΔn

■ DPX³ 250 microprocessor release Tripping curves

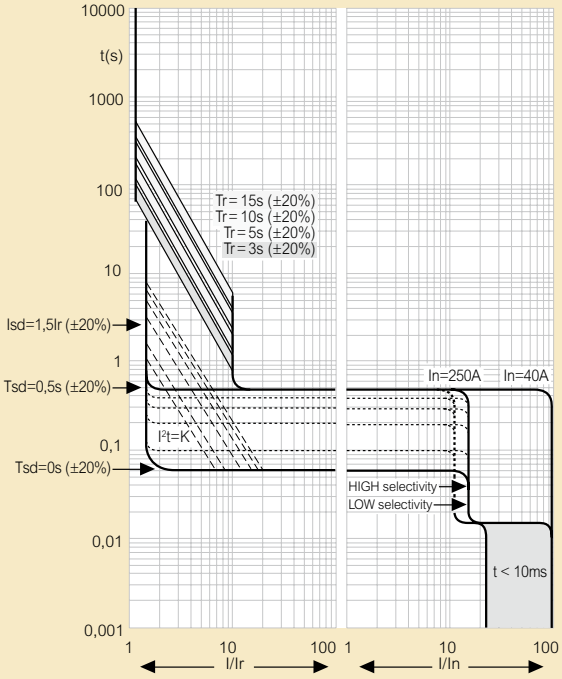

■ DPX³ 250 microprocessor release current limitation curves

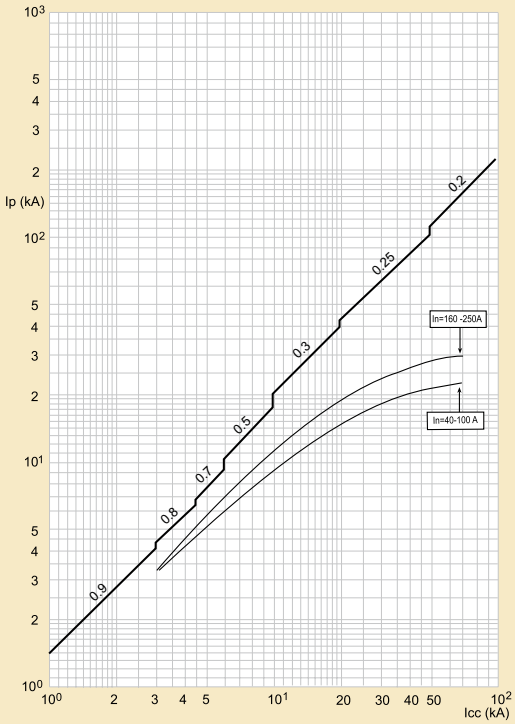

Isc = prospective short circuit symmetrical current (RMS value)
Ip = maximum short circuit peak current
– maximum prospective short circuit peak current corresponding at the power factor
– maximum real peak short circuit current

■ DPX³ 250 microprocessor release thermal stress limitation curves

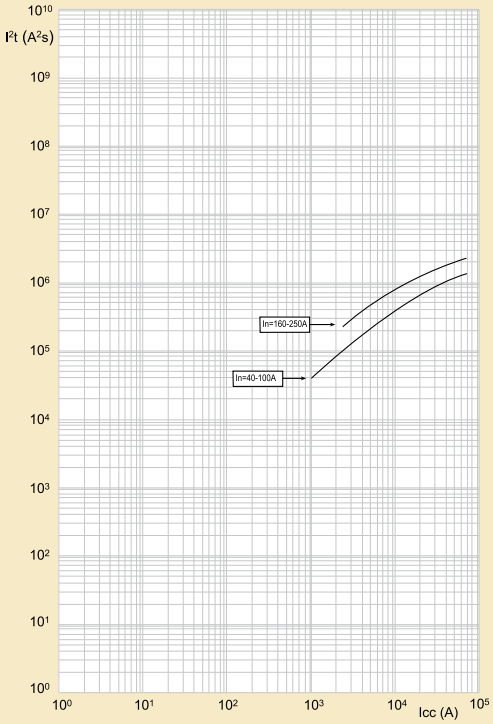

Isc = prospective short circuit symmetrical current (RMS value)
I²t = let - through energy

DPX³ 160/250 (continued)

■ DPX³ 250 microprocessor with integrated e.l.m. current limitation curves

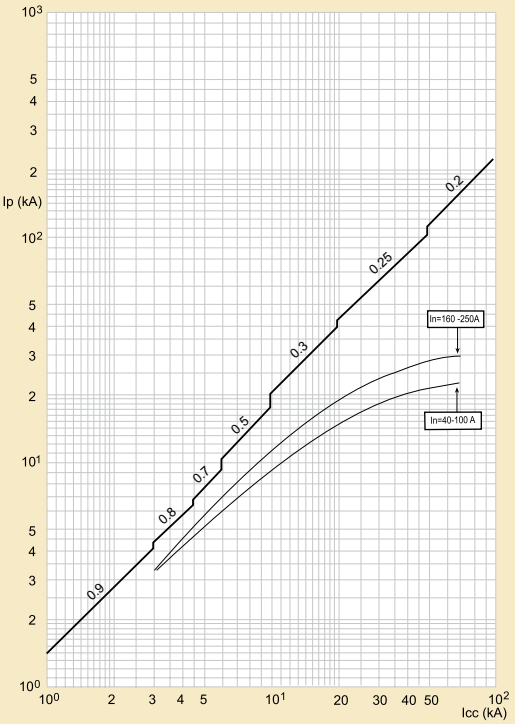

Isc = prospective short circuit symmetrical current (RMS value)
Ip = maximum short circuit peak current
– maximum prospective short circuit peak current corresponding at the power factor
– maximum real peak short circuit current

■ DPX³ 250 microprocessor with integrated e.l.m thermal stress limitation curves

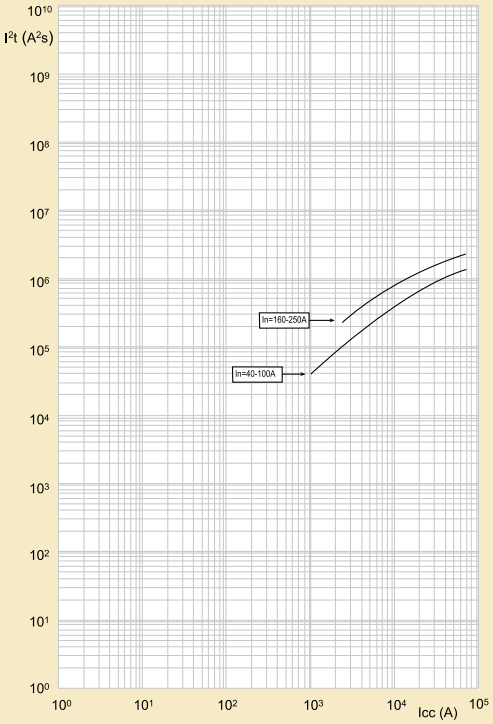

Isc = prospective short circuit symmetrical current (RMS value)
I²t = let - through energy

■ DPX³ 250 E fault Tripping characteristic

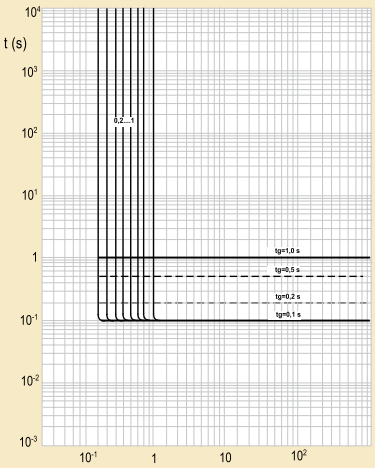

Isc = prospective short circuit symmetrical current (RMS value)
Ip = maximum short circuit peak current
– maximum prospective short circuit peak current corresponding at the power factor
– maximum real peak short circuit current

■ Adjustment for thermal-magnetic DPX³

Setting	DPX³ thermal magnetic	DPX³ with integrated e.l.m.
Ir overload trip threshold (thermal)	0.8 to 1 In	0.8 to 1 In
Im short-circuit trip threshold (magnetic)	fixed: 10 In(1)	fixed: 10 In(1)
$I_{\Delta n}$ (A)	-	0.03 - 0.03 - 1 - 3
Δt (s)	-	0 - 0.3 - 1 - 3

(1) 400 A for DPX³ 160 In 16 A and 25 A

■ Adjustment for DPX³ microprocessor release

Setting	DPX³	DPX³ with integrated e.l.m.
Ir overload trip threshold (long delay)	0.4 to 1 In	
Tr long delay trip time	3 - 5 - 10 - 15s	
Isd short-circuit trip threshold (short delay)	1.5 - 2 - 2.5 - 3 - 4 - 5 - 6 - 7 - 8 - 9 - 10 x Ir	
Tsd short delay trip time	0.01 - 0.1 - 0.2 - 0.3 - 0.4 - 0.5s	
Ig	(0.2 - 0.3 - 0.4 - 0.5 - 0.6 - 0.7 - 0.8 - 1 - OFF) x In	
Tg	0.1 - 0.2 - 0.5 - 1s	

DPX™ 250

■ Technical data

Electrical characteristics for DPX 250 (microprocessor release)

Maximum nominal operating voltage	690 V∿
Nominal frequency	50/60 Hz
Nominal rating (40° C)	40 to 250 A
Category of use	A
Overload protection	0.4 to 1 In
Short circuit protection	1.5 to 10 In
Maximum permitted cross-sections	
- rigid cables	185 mm²
- flexible cables	150 mm²
- copper bar (width)	25 mm

Performance data for DPX 250 (microprocessor release)

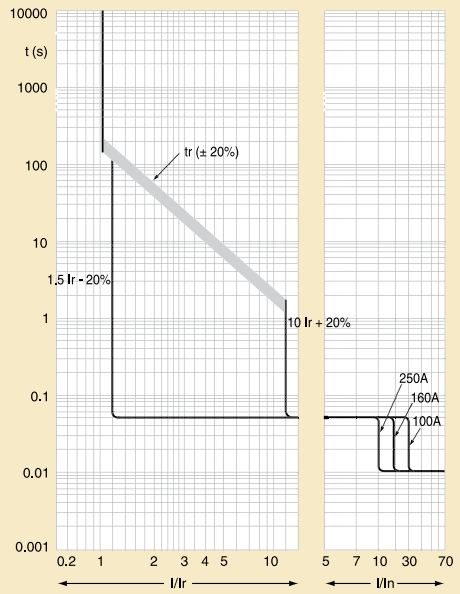

Icc = prospective short-circuit symmetrical current (rms value in A)
IP = maximum peak value (kA)
1 = current, max. peak, short-circuit rms
2 = current, unlimited peak (max.) corresponding to power factors shown above (0.15 to 0.9)

Current limitation curves

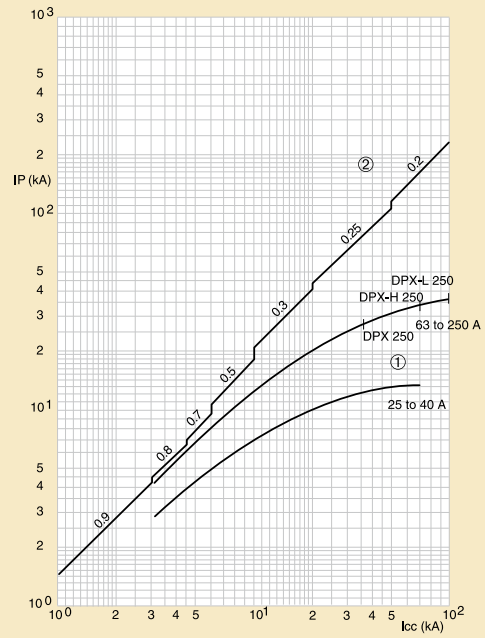

Icc = prospective short-circuit symmetrical current (rms value in kA)
IP = maximum peak value (in kA)
① = max. peak rms short-circuit currents
② = max. unlimited peak currents, corresponding to power factors indicated above (0.15 to 0.9)

Electrical characteristics for DPX 250 (thermal magnetic release)

Maximum nominal operating voltage	690 V∿ - 250 V⎓
Nominal frequency	50/60 Hz
Nominal rating (40° C)	25 to 250 A
Category of use	A
Thermal adjustment	0.64 to 1 In
Magnetic release	3.5 to 10 In
Maximum permitted cross-sections	
- rigid cables	185 mm²
- flexible cables	150 mm²
- copper bar (width)	25 mm

Performance data for DPX 250

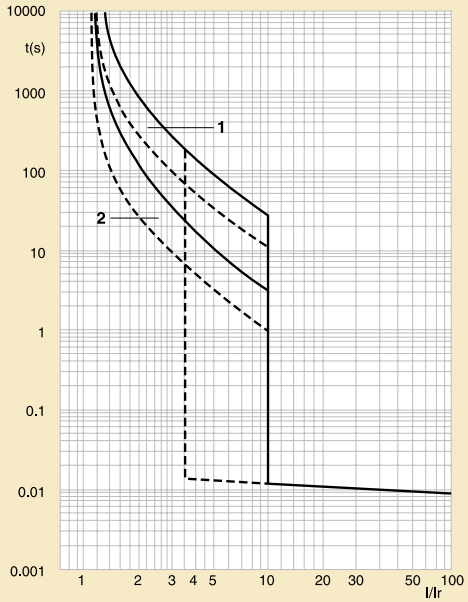

at ambient θ = 40° C
I = actual current
Ir = max. adjustment current of thermal release
1 = thermal release zone when cold
2 = thermal release zone when hot (in steady state)

Thermal stress limitation curves

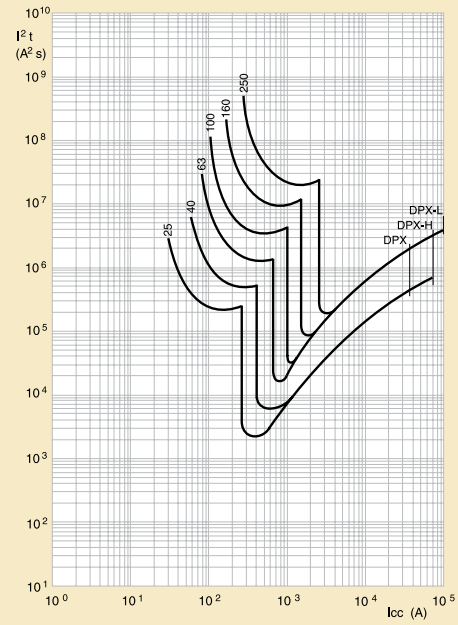

Icc = prospective short-circuit symmetrical current (rms value in A)
I²t = limited thermal stress (in A²s)

For tripping current curves of DPX 250 (Earth leakage modules) kindly refer the relevant curve on pg.54

■ Technical data

Electrical characteristics (thermal magnetic release)

Maximum nominal operating voltage	690 V∿ - 250 V=
Nominal frequency	50/60 Hz
Nominal rating (40° C)	400 to 630 A
Category of use	A
Thermal adjustment	0.8 to 1 In
Magnetic release	5 to 10 In
Maximum permitted cross-sections	
- rigid cables	300 mm²
- flexible cables	240 mm²
- copper bar (width)	32 mm

Performance data for DPX 630

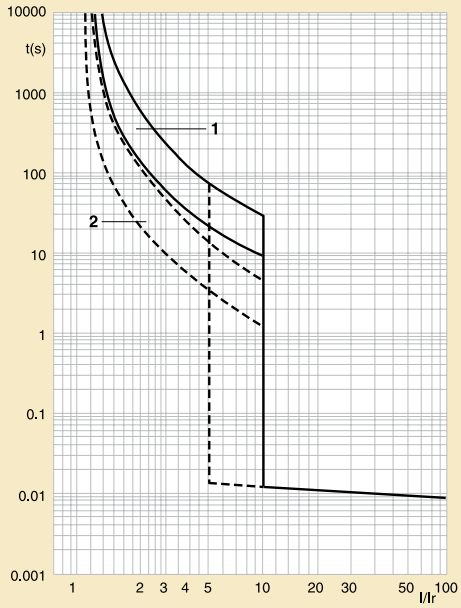

at ambient θ = 40° C
I = actual current
Ir = max. adjustment current of thermal release
1 = thermal release zone when cold
2 = thermal release zone when hot (in steady state)

Current limitation curves

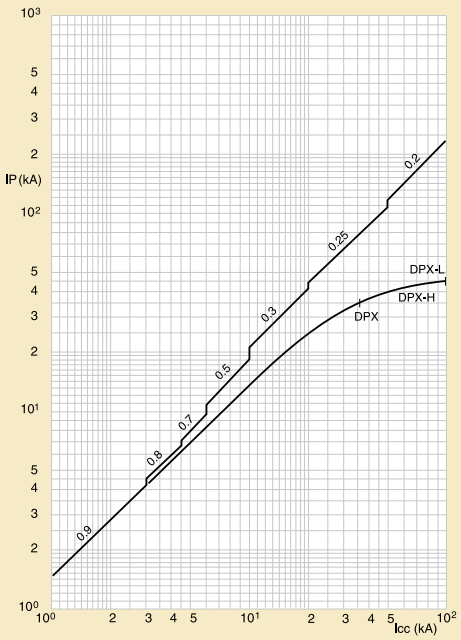

Icc = prospective short-circuit symmetrical current (rms value in kA)
IP = maximum peak value (in kA)

Electrical characteristics (microprocessor release)

MCCBs

Maximum nominal operating voltage	690 V∿
Nominal frequency	50/60 Hz
Nominal rating (40° C)	160 to 630 A
Category of use	A for In : 630 A B for In : 160 and 400 A
Adjustment current	Ir : from 0.4 to 1 In
Maximum permitted cross-sections	
- rigid cables	300 mm² (or 2 x 240 mm²)
- flexible cable	240 mm² (or 2 x 185 mm²)
- copper bar (width)	32 mm

Performance data for DPX 630 (S1)

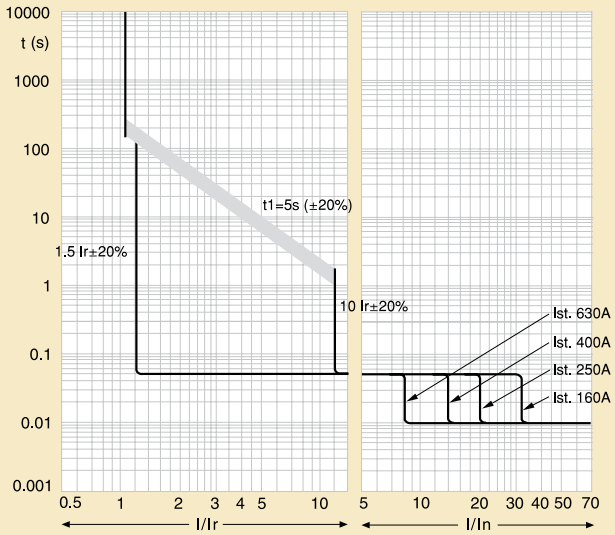

In = nominal current
I = actual current
Ir = max. adjustment current of thermal release

Performance data for DPX 630 (S_2-Sg)

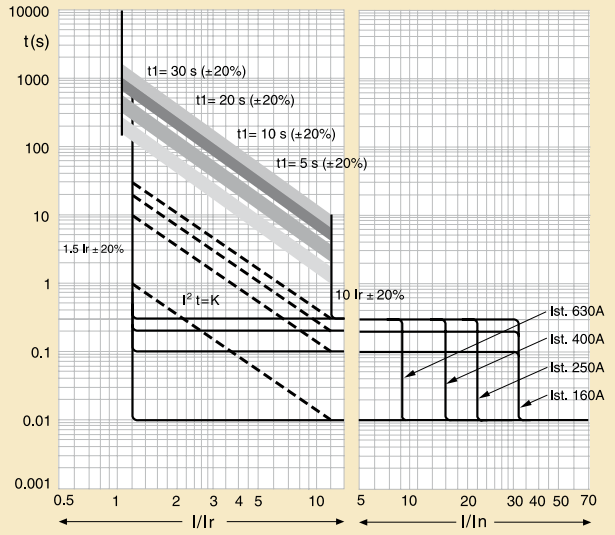

in = nominal current
I = actual current
Ir = max. adjustment current of thermal release

DPX™ 630

■ Technical data

Performance data (earth fault) Sg

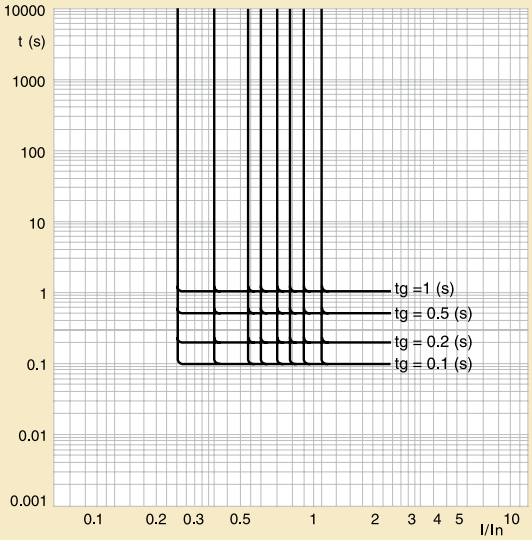

I = actual current / In = nominal current

Thermal stress limitation curves

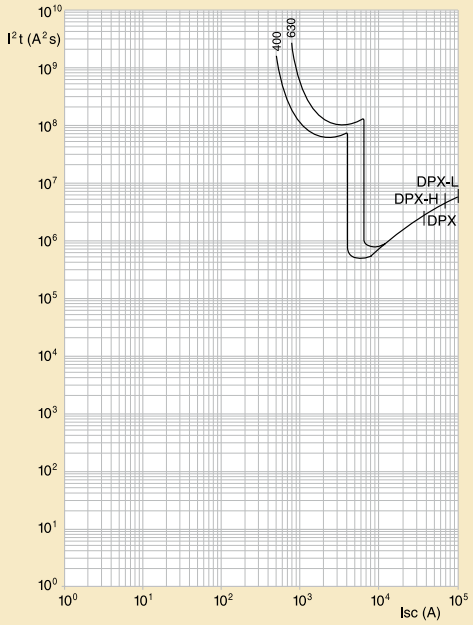

Isc = prospective short-circuit symmetrical current (rms value in A)
I^2t = limited thermal stress (in A^2s)

DPX™ 1250

■ Technical data

Electrical characteristics

Maximum nominal operating voltage	690 V∿ - 250 V⎓ (2)
Nominal frequency	50/60 Hz
Nominal rating (40° C)	500 to 1250 A
Category of use	A
Thermal adjustment	0.8 to 1 In
Magnetic release	
- 500 to 800 A	5 to 10 In
- 1000 and 1250 A	3 to 6 In
Maximum permitted cross-sections	
- 2 or 4 rigid cables	240 mm²
- 2 or 4 flexible cables	185 mm²
- copper bar (width)	50 mm

(2) Direct current: magnetic protection only

Performance data for DPX 1250

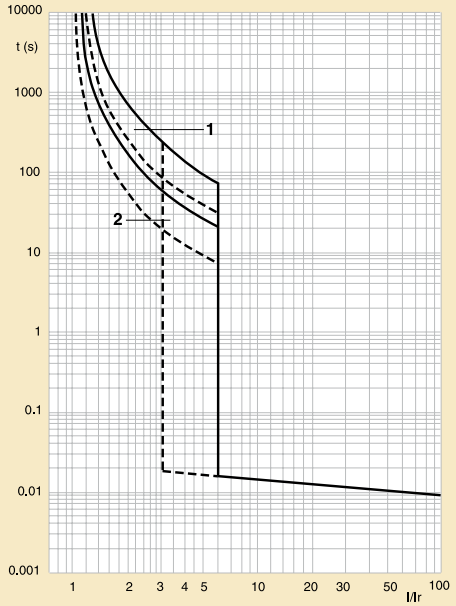

at ambient θ = 40° C
I = actual current / Ir = max. adjustment current of thermal release
1 = thermal release zone when cold
2 = thermal release zone when hot (in steady state)

Current limitation curves

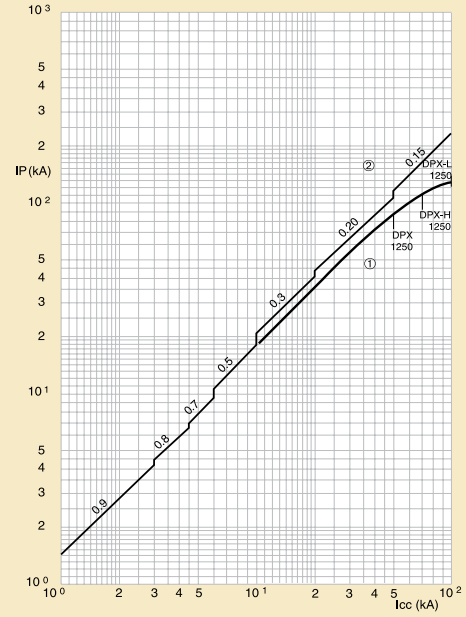

at ambient θ = 40° C
I = actual current
Ir = max. adjustment current of thermal release
1 = thermal release zone when cold
2 = thermal release zone when hot (in steady state)

DPX™ 1250

Thermal stress limitation curves

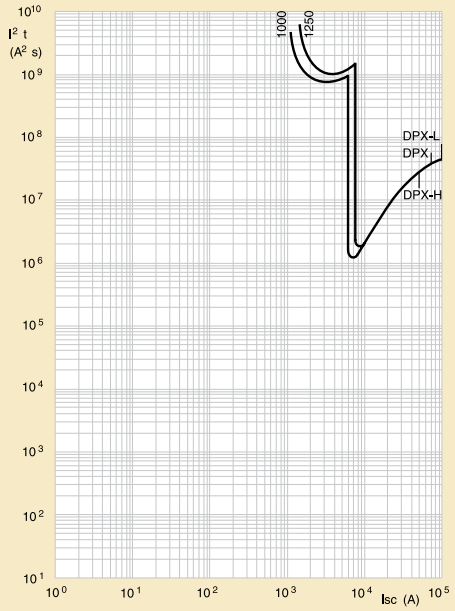

Icc = prospective short-circuit symmetrical current (rms value in A)
I²t = limited thermal stress (in A²s)

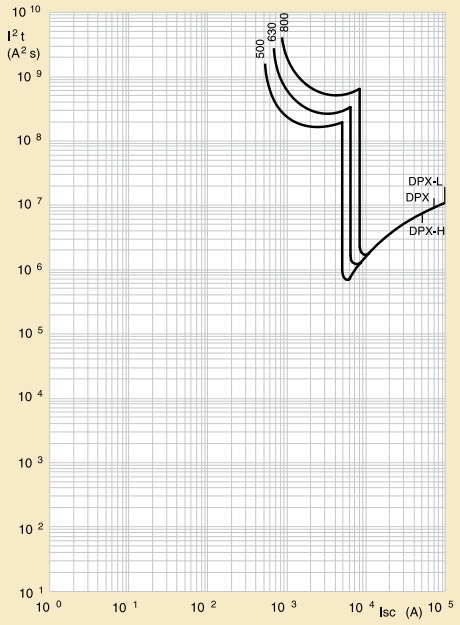

DPX™ 1600

■ Technical data

Electrical characteristics

MCCBs and trip-free switches

Maximum nominal operating voltage	690 V∿
Nominal frequency	50/60 Hz
Nominal rating (40° C)	630 to 1600 A
Category of use	B
Adjustment current	from 0.4 to 1 In
Maximum permitted cross-sections	
- 2 or 4 rigid cables	240 mm²
- 2 or 4 flexible cables	185 mm²
- copper bar (width)	50 mm

Performance data for DPX 1600 (S1)

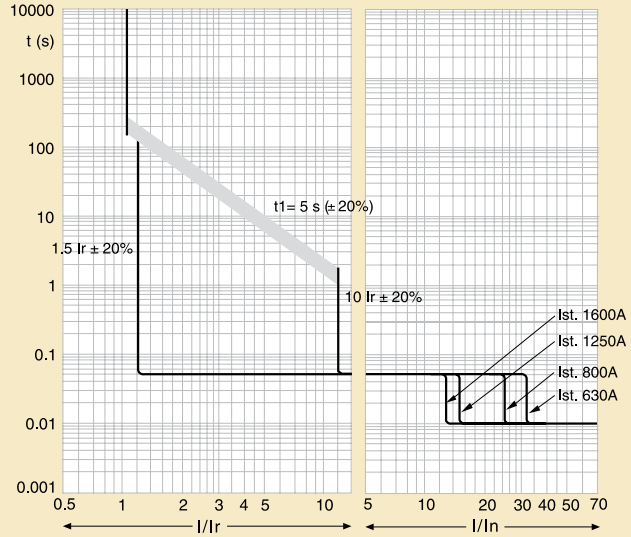

In = nominal current
I = actual current
Ir = max. adjustment current of thermal release

Performance data for DPX 1600 (Sg)

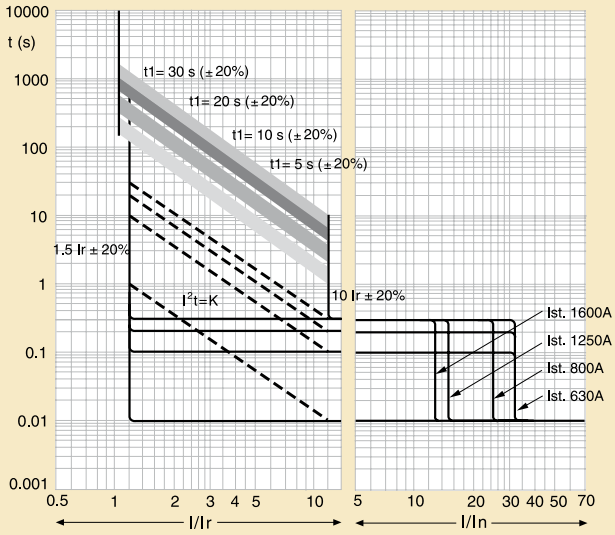

In = nominal current
I = actual current
Ir = max. adjustment current of thermal release

Performance data (Earth fault) Sg

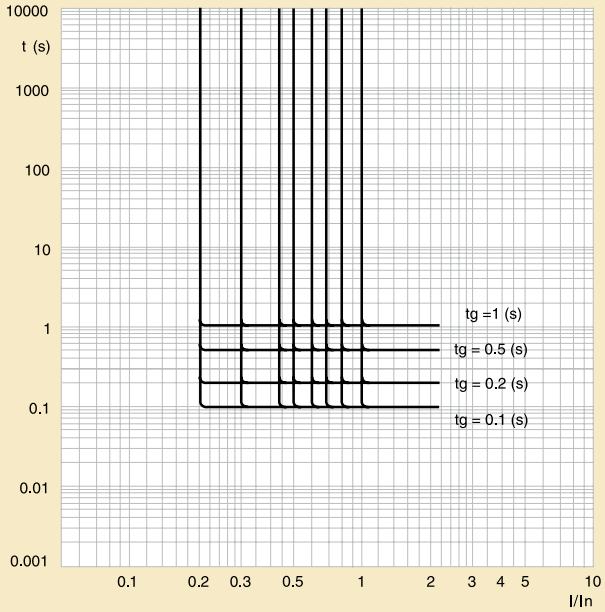

In = nominal current
I = actual current

reading DPX characteristic curves and adjustment ranges

■ Adjustment for thermal-magnetic DPX

Setting	DPX 250	DPX 630	DPX 1600
Ir overload trip threshold (thermal)	0.64 to 1 In	0.8 to 1 In	0.8 to 1 In
Im short-circuit trip threshold (magnetic)	3.5 to 10 In	5 to 10 In	5 to 10 In

■ Adjustment for DPX microprocessor release

Setting	DPX 250 / 630 / 1600 S1	DPX 250 / 630 / 1600 S2
Ir overload trip threshold (long delay)	0.4 - 0.5 - 0.6 - 0.7 - 0.8 - 0.9 - 0.95 - 1) x In	
Tr long delay trip time	fixed: 5 s (to 6 Ir)	5 - 10 - 20 - 30 s (to 6 Ir)
Im short-circuit trip threshold (short delay)	(1.5 - 2 - 3 - 4 - 5 - 6 - 8 - 10) x Ir(1)	
Tm Short delay trip time	fixed: 0.05 s	0 - 0.1 - 0.2 - 0.3 s

(1) 7.9 Ir for DPX 630 In 630 A

■ DPX³ : MCCBs with integrated ELM

Current (A)	Breaking Capacity Icu (kA)	Frame	4P
16	16kA	DPX³ 160	4200 30
	25kA	DPX³ 160	4200 70
	36kA	DPX³ 160	4201 10
	50kA	DPX³ 160	4201 50
25	16kA	DPX³ 160	4200 31
	25kA	DPX³ 160	4200 71
	36kA	DPX³ 160	4201 11
	50kA	DPX³ 160	4201 51
40	16kA	DPX³ 160	4200 32
	25kA	DPX³ 160	4200 72
	36kA	DPX³ 160	4201 12
	50kA	DPX³ 160	4201 52
	25kA	DPX³ 250	4203 22
	36kA	DPX³ 250	4203 52
	50kA	DPX³ 250	4203 82
	70kA	DPX³ 250	4206 55
	25kA	DPX³ 250	4204 22
	36kA	DPX³ 250	4204 52
	50kA	DPX³ 250	4204 82
	70kA	DPX³ 250	4206 85
63	16kA	DPX³ 160	4200 33
	25kA	DPX³ 160	4200 73
	36kA	DPX³ 160	4201 13
	50kA	DPX³ 160	4201 53
80	16kA	DPX³ 160	4200 34
	25kA	DPX³ 160	4200 74
	36kA	DPX³ 160	4201 14
	50kA	DPX³ 160	4201 54
100	16kA	DPX³ 160	4200 35
	25kA	DPX³ 160	4200 75
	36kA	DPX³ 160	4201 15
	50kA	DPX³ 160	4201 55
	25kA	DPX³ 250	4202 25
	36kA	DPX³ 250	4202 55
	50kA	DPX³ 250	4202 85
	70kA	DPX³ 250	4206 25
	25kA	DPX³ 250	4203 25
	36kA	DPX³ 250	4203 55
	50kA	DPX³ 250	4203 85
	70kA	DPX³ 250	4206 57
	25kA	DPX³ 250	4204 25
	36kA	DPX³ 250	4204 55
	50kA	DPX³ 250	4204 85
	70kA	DPX³ 250	4206 87
125	16kA	DPX³ 160	4200 36
	25kA	DPX³ 160	4200 76
	36kA	DPX³ 160	4201 16
	50kA	DPX³ 160	4201 56
160	16kA	DPX³ 160	4200 37
	25kA	DPX³ 160	4200 77
	36kA	DPX³ 160	4201 17
	50kA	DPX³ 160	4201 57
	25kA	DPX³ 250	4202 27
	36kA	DPX³ 250	4202 57
	50kA	DPX³ 250	4202 87
	70kA	DPX³ 250	4206 27
	25kA	DPX³ 250	4203 27
	36kA	DPX³ 250	4203 57
	50kA	DPX³ 250	4203 87
	70kA	DPX³ 250	4206 58
	25kA	DPX³ 250	4204 27
	36kA	DPX³ 250	4204 57
	50kA	DPX³ 250	4204 87
	70kA	DPX³ 250	4206 88
200	25kA	DPX³ 250	4202 28
	36kA	DPX³ 250	4202 58
	50kA	DPX³ 250	4202 88
	70kA	DPX³ 250	4206 28
250	25kA	DPX³ 250	4202 29
	36kA	DPX³ 250	4202 59
	50kA	DPX³ 250	4202 89
	70kA	DPX³ 250	4206 29
	25kA	DPX³ 250	4203 29
	36kA	DPX³ 250	4203 59
	50kA	DPX³ 250	4203 89
	70kA	DPX³ 250	4206 59
	25kA	DPX³ 250	4204 29
	36kA	DPX³ 250	4204 59
	50kA	DPX³ 250	4204 89
	70kA	DPX³ 250	4206 89

DPX™ MCCBS

DPX MCCBs and ELMs

Current (A)	Breaking capacity Icu (kA)	Frame	3P	3P+N/2	4P	ELM (side by side) 4P	ELM (underneath) 4P
40	36	DPX 250	0253 28	-	0253 45	-	0260 55
	70	DPX 250	0253 52	-	0253 69	-	0260 55
		DPX 250 - S1	0254 13	-	0254 19	-	0260 55
63	36	DPX 250	0253 29	-	0253 46	-	0260 55
	70	DPX 250	0253 53	-	0253 70	-	0260 55
100	36	DPX 250	0253 30	6253 40	0253 47	-	0260 55
	70	DPX 250	0253 54	0253 64	0253 71	-	0260 55
		DPX 250 - S1	0254 15	-	0254 21	-	0260 55
160	36	DPX 250	0253 31	0253 41	0253 48	-	0260 55
		DPX 630 - S1	0256 00	-	0256 04	-	0260 61
		DPX 630 - S2	0256 25	-	0256 29	-	0260 61
		DPX 630 - Sg	0256 50	-	0256 54	-	0260 61
	70	DPX 250	0253 55	0253 65	0253 72	-	0260 55
		DPX 250 - S1	0254 16	-	0254 22	-	0260 55
		DPX 630 - S1	0256 08	-	0256 12	-	0260 61
		DPX 630 - S2	0256 33	-	0256 37	-	0260 61
		DPX 630 - Sg	0256 58	-	0256 62	-	0260 61
250	36	DPX 250	0253 32	0253 42	0253 49	-	0260 55
		DPX 630 - S1	0256 01	-	0256 05	-	0260 61
		DPX 630 - S2	0256 26	-	0256 30	-	0260 61
		DPX 630 - Sg	0256 51	-	0256 55	-	0260 61
	70	DPX 250	0253 56	0253 66	0253 73	-	0260 55
		DPX 250 - S1	0254 17	-	0254 23	-	0260 55
		DPX 630 - S1	0256 09	-	0256 13	-	0260 61
		DPX 630 - S2	0256 34	-	0256 38	-	0260 61
		DPX 630 - Sg	0256 59	-	0256 63	-	0260 61
400	36	DPX 630	0255 23	-	0255 38	-	0260 61
		DPX 630 - S1	0256 02	-	0256 06	-	0260 61
		DPX 630 - S2	0256 27	-	0256 31	-	0260 61
		DPX 630 - Sg	0256 52	-	0256 56	-	0260 61
	70	DPX 630	0255 43	-	0255 58	-	0260 61
		DPX 630 - S1	0256 10	-	0256 14	-	0260 61
		DPX 630 - S2	0256 35	-	0256 39	-	0260 61
		DPX 630 - Sg	0256 60	-	0256 64	-	0260 61
	100	DPX 630	0255 63	-	0255 78	-	0260 61
630	36	DPX 630	0255 24	-	0255 40	-	0260 61
		DPX 630 - S1	0256 03	-	0256 07	-	0260 61
		DPX 630 - S2	0256 28	-	0256 32	-	0260 61
		DPX 630 - Sg	0256 53	-	0256 57	-	0260 61
	70	DPX 630	0255 44	-	0255 60	-	0260 61
		DPX 630 - S1	0256 11	-	0256 15	-	0260 61
		DPX 630 - S2	0256 36	-	0256 40	-	0260 61
		DPX 630 - Sg	0256 61	-	0256 65	-	0260 61
	100	DPX 630	0255 64	-	0255 80	-	0260 61
800	50	DPX 1250	0258 02	-	0258 09	-	-
		DPX 1600 - S1	0257 02	-	0257 06	-	-
		DPX 1600 - Sg	0257 51	-	0257 55	-	-
	70	DPX 1250	0258 16	-	0258 23	-	-
		DPX 1600 - S1	0257 10	-	0257 14	-	-
		DPX 1600 - Sg	0257 59	-	0257 63	-	-
	100	DPX 1250	0258 30	-	0258 39	-	-
1000	50	DPX 1250	0258 03	-	0258 10	-	-
	70		0258 17	-	0258 24	-	-
	100		0258 31	-	0258 40	-	-
1250	50	DPX 1250	0258 04	-	0258 11	-	-
		DPX 1600 - S1	0257 03	-	0257 07	-	-
		DPX 1600 - Sg	0257 52	-	0257 56	-	-
	70	DPX 1250	0258 18	-	0258 25	-	-
		DPX 1600 - S1	0257 11	-	0257 15	-	-
		DPX 1600 - Sg	0257 60	-	0257 64	-	-
	100	DPX 1250	0258 32	-	0258 41	-	-
1600	50	DPX 1600 - S1	0257 04	-	0257 08	-	-
		DPX 1600 - Sg	0257 53	-	0257 57	-	-
	70	DPX 1600 - S1	0257 12	-	0257 16	-	-
		DPX 1600 - Sg	0257 61	-	0257 65	-	-

DPX™ MCCBS

Equipment for plug-in and draw-out MCCBS (on request)

Frame		Plug-in			Draw-out		
		Front terminal mounting base + tulip contacts	Rear terminal mounting base + tulip contacts	Flat rear terminal mounting base + tulip contacts	Front terminal mounting base + tulip contacts	Rear terminal mounting base + tulip contacts	Flat rear terminal mounting base + tulip contacts
DPX³ 160	3P	- - - -	4210 40 4210 44 4210 36 +4210 04	- - - -	- - - -	- - - -	- - - -
	4P	- - - -	4210 41 4210 44 4210 37 +4210 04	- - - -	- - - -	- - - -	- - - -
DPX³ 250	3P	- - - -	4210 42 4210 44 4210 38 +4210 04	- - - -	- - - -	- - - -	- - - -
	4P	- - - -	4210 43 4210 44 4210 39 +4210 04	- - - -	- - - -	- - - -	- - - -
DPX 250	3P	0265 31 0265 29 0263 43 +0263 99 0262 79 -	0265 33 0265 29 0263 43 +0263 99 0262 79 -	0265 35 0265 29 0263 43 +0263 99 0262 79 -	0265 31 0265 29 0265 45 +0265 75 0263 99 0262 79	0265 33 0265 29 0265 45 +0265 75 0263 99 0262 79	0265 35 0265 29 0265 45 +0265 75 0263 99 0262 79
	4P	0265 32 0265 30 0263 43 +0263 99 0262 79 -	0265 34 0265 30 0263 43 +0263 99 0262 79 -	0265 36 0265 30 0263 43 +0263 99 0262 79 -	0265 32 0265 30 0265 46 +0265 75 0263 99 0262 79	0265 34 0265 30 0265 46 +0265 75 0263 99 0262 79	0265 36 0265 30 0265 46 +0265 75 0263 99 0262 79
	4P + ELM	0265 37 0265 30 0263 43 +0263 99 0262 79 -	0265 38 0265 30 0263 43 +0263 99 0262 79 -	0265 39 0265 30 0263 43 +0263 99 0262 79 -	0265 37 0265 30 0265 47 +0265 75 0263 99 0262 79	0265 38 0265 30 0265 47 +0265 75 0263 99 0262 79	0265 39 0265 30 0265 47 +0265 75 0263 99 0262 79
DPX 630	3P	0265 52 0265 50 0263 68 +0263 99 0262 81 -	0265 54 0265 50 0263 68 +0263 99 0262 81 -	0265 56 0265 50 0263 68 +0263 99 0262 81 -	0265 52 0265 50 0265 66 +0265 75 0263 99 0262 81	0265 54 0265 50 0265 66 +0265 75 0263 99 0262 81	0265 56 0265 50 0265 66 +0265 75 0263 99 0262 81
	4P	0265 53 0265 51 0263 68 +0263 99 0262 81 -	0265 55 0265 51 0263 68 +0263 99 0262 81 -	0265 57 0265 51 0263 68 +0263 99 0262 81 -	0265 53 0265 51 0265 67 +0265 75 0263 99 0262 81	0265 55 0265 51 0265 67 +0265 75 0263 99 0262 81	0265 57 0265 51 0265 67 +0265 75 0263 99 0262 81
	4P + ELM	0265 58 0265 51 0263 68 +0263 99 0262 81 -	0265 59 0265 51 0263 68 +0263 99 0262 81 -	0265 60 0265 51 0263 68 +0263 99 0262 81 -	0265 58 0265 51 0265 68 +0265 75 0263 99 0262 81	0265 59 0265 51 0265 68 +0265 75 0263 99 0262 81	0265 60 0265 51 0265 68 +0265 75 0263 99 0262 81
DPX 1600	3P	- - - -	- - - -	- - - -	0265 82 +0265 75 0263 99 0262 83	- - - -	0265 84 +0265 75 0263 99 0262 83
	4P	- - - -	- - - -	- - - -	0265 83 +0265 75 0263 99 0262 83	- - - -	0265 85 +0265 75 0263 99 0262 83

* Adjustable on the front

selectivity table thermal-magnetic release DPX³ or DPX / DPX³, DPX

■ Limits of selectivity (average values kA at 400 V∿)

Downstream MCCB	In (A)	Upstream MCCB																								
		DPX³ 160 (16. 25. 36. 50 kA) with or without e.l.m.								DPX³ 250 (25. 36. 50. 70 kA) with or without e.l.m.				DPX and DPX-H 250 (36 and 70 kA)					DPX and DPX-H 630 (36, 70 kA and 100 kA)					DPX and DPX-H 1250 (36 and 70 kA)		
		16	25	40	63	80	100	125	160	100	160	200	250	40	63	100	160	250	250	320	400	500	630	800	1000	1250
DPX³ 160 (16. 25. 36. 50 kA) with or without e.l.m.	16	-	-	-	0.63	0.8	1	1.25	1.6	1	1.6	2	2.5	-	0.63	1	1.6	2.5	2.5	3.2	4	5	6.3	16	16	16
	25	-	-	-	0.63	0.8	1	1.25	1.6	1	1.6	2	2.5	-	0.63	1	1.6	2.5	2.5	3.2	4	5	6.3	16	16	16
	40	-	-	-	0.63	0.8	1	1.25	1.6	1	1.6	2	2.5	-	0.63	1	1.6	2.5	2.5	3.2	4	5	6.3	16	16	16
	63	-	-	-	-	0.8	1	1.25	1.6	1	1.6	2	2.5	-	-	1	1.6	2.5	2.5	3.2	4	5	6.3	16	16	16
	80	-	-	-	-	-	1	1.25	1.6	1	1.6	2	2.5	-	-	1	1.6	2.5	2.5	3.2	4	5	6.3	16	16	16
	100	-	-	-	-	-	-	1.25	1.6	-	1.6	2	2.5	-	-	-	1.6	2.5	2.5	3.2	4	5	6.3	16	16	16
	125	-	-	-	-	-	-	-	1.6	-	1.6	2	2.5	-	-	-	1.6	2.5	2.5	3.2	4	5	6.3	16	16	16
	160	-	-	-	-	-	-	-	-	-	-	2	2.5	-	-	-	-	2.5	2.5	3.2	4	5	6.3	16	16	16
DPX³ 250 thermal-magnetic (25, 36, 50, 70 kA) with or without e.l.m.	100	-	-	-	-	-	-	-	-	-	1.6	2	2.5	-	-	-	1.6	2.5	2.5	3.2	4	5	6.3	16	16	16
	160	-	-	-	-	-	-	-	-	-	-	2	2.5	-	-	-	-	2.5	2.5	3.2	4	5	6.3	16	16	16
	200	-	-	-	-	-	-	-	-	-	-	-	2.5	-	-	-	-	2.5	2.5	3.2	4	5	6.3	16	16	16
	250	-	-	-	-	-	-	-	-	-	-	-	-	-	-	-	-	-	-	3.2	4	5	6.3	16	16	16
DPX³ 250 microprocessor release(1) (25, 36, 50, 70 kA) with or without e.l.m.	40	-	-	-	-	-	-	-	-	-	-	-	-	-	0.63	1	1.6	2.5	2	2.5	3.2	4	5	-	-	-
	100	-	-	-	-	-	-	-	-	-	-	-	-	-	-	-	1.6	2.5	2	2.5	3.2	4	5	-	-	-
	160	-	-	-	-	-	-	-	-	-	-	-	-	-	-	-	-	2.5	2	2.5	3.2	4	5	-	-	-
	200	-	-	-	-	-	-	-	-	-	-	-	-	-	-	-	-	2.5	2	2.5	3.2	4	5	-	-	-
	250	-	-	-	-	-	-	-	-	-	-	-	-	-	-	-	-	-	-	2.5	3.2	4	5	-	-	-
DPX³ 250 microprocessor release(2) (25, 36, 50, 70 kA) with or without e.l.m.	40	-	-	-	-	-	-	-	-	1	1.6	2	2.5	-	0.63	1	1.6	2.5	2.5	3.2	4	5	6.3	16	16	16
	100	-	-	-	-	-	-	-	-	-	1.6	2	2.5	-	-	-	1.6	2.5	2.5	3.2	4	5	6.3	16	16	16
	160	-	-	-	-	-	-	-	-	-	-	2	2.5	-	-	-	-	2.5	2.5	3.2	4	5	6.3	16	16	16
	200	-	-	-	-	-	-	-	-	-	-	-	2.5	-	-	-	-	2.5	2.5	3.2	4	5	6.3	16	16	16
	250	-	-	-	-	-	-	-	-	-	-	-	-	-	-	-	-	-	-	3.2	4	5	6.3	16	16	16
DPX and DPX-H 250 thermal magnetic (36, 70 kA and 100 kA)	40	-	-	-	-	-	-	-	-	1	1.6	2	2.5	-	0.63	1	1.6	2.5	2.5	3.2	4	5	6.3	16	16	16
	63	-	-	-	-	-	-	-	-	1	1.6	2	2.5	-	-	1	1.6	2.5	2.5	3.2	4	5	6.3	16	16	16
	100	-	-	-	-	-	-	-	-	-	1.6	2	2.5	-	-	-	1.6	2.5	2.5	3.2	4	5	6.3	16	16	16
	160	-	-	-	-	-	-	-	-	-	-	2	2.5	-	-	-	-	2.5	2.5	3.2	4	5	6.3	16	16	16
	250	-	-	-	-	-	-	-	-	-	-	-	-	-	-	-	-	-	-	3.2	4	5	6.3	16	16	16
DPX 250 microprocessor release(1) S1 and S2 (36, 70 kA)	40	-	-	-	-	-	-	-	-	-	-	-	-	-	-	-	-	-	2	2.5	3.2	4	5	-	-	-
	100	-	-	-	-	-	-	-	-	-	-	-	-	-	-	-	-	-	2	2.5	3.2	4	5	-	-	-
	160	-	-	-	-	-	-	-	-	-	-	-	-	-	-	-	-	-	2	2.5	3.2	4	5	-	-	-
	250	-	-	-	-	-	-	-	-	-	-	-	-	-	-	-	-	-	-	2.5	3.2	4	5	-	-	-
DPX 250 microprocessor release(2) S1 and S2 (36, 70 kA)	40	-	-	-	-	-	-	-	-	1	1.6	2	2.5	-	0.63	1	1.6	2.5	2.5	3.2	4	5	6.3	16	16	16
	100	-	-	-	-	-	-	-	-	-	1.6	2	2.5	-	-	-	1.6	2.5	2.5	3.2	4	5	6.3	16	16	16
	160	-	-	-	-	-	-	-	-	-	-	2	2.5	-	-	-	-	2.5	2.5	3.2	4	5	6.3	16	16	16
	250	-	-	-	-	-	-	-	-	-	-	-	-	-	-	-	-	-	-	3.2	4	5	6.3	16	16	16
DPX and DPX-H 630 thermal magnetic (36, 70 kA and 100 kA)	400	-	-	-	-	-	-	-	-	-	-	-	-	-	-	-	-	-	-	-	-	5	6.3	16	16	16
	500	-	-	-	-	-	-	-	-	-	-	-	-	-	-	-	-	-	-	-	-	-	6.3	16	16	16
	630	-	-	-	-	-	-	-	-	-	-	-	-	-	-	-	-	-	-	-	-	-	-	16	16	16
DPX and DPX-H 630 microprocessor release(1) S1,S2 (36, 70 kA) and Sg	400	-	-	-	-	-	-	-	-	-	-	-	-	-	-	-	-	-	-	-	-	-	-	-	-	-
	630	-	-	-	-	-	-	-	-	-	-	-	-	-	-	-	-	-	-	-	-	-	-	-	-	-
DPX and DPX-H 630 microprocessor release(2) S1, S2 (36, 70 kA) and Sg	400	-	-	-	-	-	-	-	-	-	-	-	-	-	-	-	-	-	-	-	-	5	6.3	8	8	8
	630	-	-	-	-	-	-	-	-	-	-	-	-	-	-	-	-	-	-	-	-	-	-	8	8	8
DPX and DPX-H 1250 thermal magnetic (50, 70 kA)	800	-	-	-	-	-	-	-	-	-	-	-	-	-	-	-	-	-	-	-	-	-	-	-	8	8
	1000	-	-	-	-	-	-	-	-	-	-	-	-	-	-	-	-	-	-	-	-	-	-	-	-	8
	1250	-	-	-	-	-	-	-	-	-	-	-	-	-	-	-	-	-	-	-	-	-	-	-	-	-
DPX and DPX-H 1600 microprocessor release(1) S1, S2 (50, 70 kA) and Sg	800	-	-	-	-	-	-	-	-	-	-	-	-	-	-	-	-	-	-	-	-	-	-	-	-	-
	1250	-	-	-	-	-	-	-	-	-	-	-	-	-	-	-	-	-	-	-	-	-	-	-	-	-
	1600	-	-	-	-	-	-	-	-	-	-	-	-	-	-	-	-	-	-	-	-	-	-	-	-	-
DPX and DPX-H 1600 microprocessor release(2) S1, S2 (50, 70 kA) and Sg	800	-	-	-	-	-	-	-	-	-	-	-	-	-	-	-	-	-	-	-	-	-	-	-	8	8
	1250	-	-	-	-	-	-	-	-	-	-	-	-	-	-	-	-	-	-	-	-	-	-	-	-	-
	1600	-	-	-	-	-	-	-	-	-	-	-	-	-	-	-	-	-	-	-	-	-	-	-	-	-

T = total selectivity. up to downstream circuit breaker breaking capacity. according to IEC 60947-2
(1) Microprocessor release. selector switch on "HIGH"
(2) Microprocessor release. selector switch on "LOW"

selectivity table microprocessor release DPX³ or DPX / DPX³, DPX

■ Limits of selectivity (average values kA at 400 V∿)

Downstream MCCB	Icu (kA)	In (A)	Upstream MCCB microprocessor release, selector switch on "HIGH"													
			DPX³ 250 microprocessor release (25, 36, 50, 70 kA) with or without e.l.m.				DPX and DPX-H 250 microprocessor release S1, S2 (36 and 70 kA)				DPX and DPX-H 630 microprocessor release S1, S2 (36 and 70 kA) and Sg			DPX and DPX-H 1600 microprocessor release S1, S2 (50 and 70 kA) and Sg		
			40	100	160	250	40	100	160	250	250	400	630	800	1250	1600
DPX³ 160 with or without e.l.m.	16 kA	16, 25	T	T	T	T	-	T	T	T	T	T	T	T	T	T
		40, 63, 80	-	T	T	T	-	T	T	T	T	T	T	T	T	T
		100	-	-	T	T	-	-	T	T	T	T	T	T	T	T
		125	-	-	-	T	-	-	T	T	T	T	T	T	T	T
		160	-	-	-	T	-	-	-	T	T	T	T	T	T	T
	25 kA	16, 25	16	16	16	16	-	T	T	T	T	T	T	T	T	T
		40, 63, 80	-	16	16	16	-	T	T	T	T	T	T	T	T	T
		100	-	-	16	16	-	-	T	T	T	T	T	T	T	T
		125	-	-	-	16	-	-	T	T	T	T	T	T	T	T
		160	-	-	-	16	-	-	-	T	T	T	T	T	T	T
	36 kA	16, 25	16	16	16	16	-	T	T	T	T	T	T	T	T	T
		40, 63, 80	-	16	16	16	-	T	T	T	T	T	T	T	T	T
		100	-	-	16	16	-	-	T	T	T	T	T	T	T	T
		125	-	-	-	16	-	-	T	T	T	T	T	T	T	T
		160	-	-	-	16	-	-	-	T	T	T	T	T	T	T
	50 kA	16, 25	25	25	25	25	-	25	25	25	36	36	36	36	36	36
		40, 63, 80	-	25	25	25	-	25	25	25	36	36	36	36	36	36
		100	-	-	25	25	-	-	25	25	36	36	36	36	36	36
		125	-	-	-	25	-	-	25	25	36	36	36	36	36	36
		160	-	-	-	25	-	-	-	25	36	36	36	36	36	36
DPX³ 250 thermal-magnetic with or without e.l.m.	25 kA	100	-	-	16	16	-	-	T	T	T	T	T	T	T	T
		160	-	-	-	16	-	-	-	T	T	T	T	T	T	T
		200	-	-	-	16	-	-	-	T	T	T	T	T	T	T
		250	-	-	-	-	-	-	-	-	-	T	T	T	T	T
	36 kA	100	-	-	25	25	-	-	25	25	T	T	T	T	T	T
		160	-	-	-	25	-	-	-	25	T	T	T	T	T	T
		200	-	-	-	25	-	-	-	25	T	T	T	T	T	T
		250	-	-	-	-	-	-	-	-	-	T	T	T	T	T
	50 kA	100	-	-	25	25	-	-	25	25	T	T	T	T	T	T
		160	-	-	-	25	-	-	-	25	T	T	T	T	T	T
		200	-	-	-	25	-	-	-	25	T	T	T	T	T	T
		250	-	-	-	-	-	-	-	-	-	T	T	T	T	T
	70 kA	100	-	-	36	36	-	-	36	36	36	36	36	36	36	36
		160	-	-	-	36	-	-	-	36	36	36	36	36	36	36
		200	-	-	-	36	-	-	-	36	36	36	36	36	36	36
		250	-	-	-	-	-	-	-	-	-	36	36	36	36	36
DPX³ 250 microprocessor release(1) with or without e.l.m.	25 kA	40	-	1	1.6	2.5	-	1	1.6	2.5	2.5	4	6.3	8	12.5	16
		100	-	-	1.6	2.5	-	-	1.6	2.5	2.5	4	6.3	8	12.5	16
		160	-	-	-	2.5	-	-	-	2.5	2.5	4	6.3	8	12.5	16
		250	-	-	-	-	-	-	-	-	-	4	6.3	8	12.5	16
	36 kA	40	-	1	1.6	2.5	-	1	1.6	2.5	2.5	4	6.3	8	12.5	16
		100	-	-	1.6	2.5	-	-	1.6	2.5	2.5	4	6.3	8	12.5	16
		160	-	-	-	2.5	-	-	-	2.5	2.5	4	6.3	8	12.5	16
		250	-	-	-	-	-	-	-	-	-	4	6.3	8	12.5	16
	50 kA	40	-	1	1.6	2.5	-	1	1.6	2.5	2.5	4	6.3	8	12.5	16
		100	-	-	1.6	2.5	-	-	1.6	2.5	2.5	4	6.3	8	12.5	16
		160	-	-	-	2.5	-	-	-	2.5	2.5	4	6.3	8	12.5	16
		250	-	-	-	-	-	-	-	-	-	4	6.3	8	12.5	16
	70 kA	40	-	1	1.6	2.5	-	1	1.6	2.5	2.5	4	6.3	8	12.5	16
		100	-	-	1.6	2.5	-	-	1.6	2.5	2.5	4	6.3	8	12.5	16
		160	-	-	-	2.5	-	-	-	2.5	2.5	4	6.3	8	12.5	16
		250	-	-	-	-	-	-	-	-	-	4	6.3	8	12.5	16
DPX³ 250 microprocessor release(2) with or without e.l.m.	25 kA	40	-	T	T	T	-	25	25	25	T	T	T	T	T	T
		100	-	-	T	T	-	-	25	25	T	T	T	T	T	T
		160	-	-	-	T	-	-	-	25	T	T	T	T	T	T
		250	-	-	-	-	-	-	-	-	-	T	T	T	T	T
	36 kA	40	-	36	36	36	-	36	36	36	36	36	36	T	T	T
		100	-	-	36	36	-	-	36	36	36	36	36	T	T	T
		160	-	-	-	36	-	-	-	36	36	36	36	T	T	T
		250	-	-	-	-	-	-	-	-	-	36	36	T	T	T
	50 kA	40	-	36	36	36	-	36	36	36	36	36	36	36	36	36
		100	-	-	36	36	-	-	36	36	36	36	36	36	36	36
		160	-	-	-	36	-	-	-	36	36	36	36	36	36	36
		250	-	-	-	-	-	-	-	-	-	36	36	36	36	36
	70 kA	40	-	36	36	36	-	36	36	36	36	36	36	36	36	36
		100	-	-	36	36	-	-	36	36	36	36	36	36	36	36
		160	-	-	-	36	-	-	-	36	36	36	36	36	36	36
		250	-	-	-	-	-	-	-	-	-	36	36	36	36	36
DPX 250 thermal magnetic	36 kA	40	-	T	T	T	-	25	25	25	T	T	T	T	T	T
		63	-	T	T	T	-	25	25	25	T	T	T	T	T	T
		100	-	-	T	T	-	-	25	25	T	T	T	T	T	T
		160	-	-	-	T	-	-	-	25	T	T	T	T	T	T
		250	-	-	-	-	-	-	-	-	-	T	T	T	T	T
	70 kA and 100 kA	40	-	36	36	36	-	36	36	36	36	36	36	36	36	36
		63	-	36	36	36	-	36	36	36	36	36	36	36	36	36
		100	-	-	36	36	-	-	36	36	36	36	36	36	36	36
		160	-	-	-	36	-	-	-	36	36	36	36	36	36	36
		250	-	-	-	-	-	-	-	-	-	36	36	36	36	36
DPX 250 microprocessor release(1) S1, S2	36 and 70 kA	40	-	1	1.6	2.5	-	1	1.6	2.5	2.5	4	6.3	8	12.5	16
		100	-	-	1.6	2.5	-	-	1.6	2.5	2.5	4	6.3	8	12.5	16
		160	-	-	-	2.5	-	-	-	2.5	2.5	4	6.3	8	12.5	16
		250	-	-	-	-	-	-	-	-	-	4	6.3	8	12.5	16
DPX 250 microprocessor release(2) S1, S2	36 and 70 kA	40	-	36	36	36	36	36	36	36	36	36	36	36	36	36
		100	-	-	36	36	-	-	36	36	36	36	36	36	36	36
		160	-	-	-	36	-	-	-	36	-	36	36	36	36	36
		250	-	-	-	-	-	-	-	-	-	36	36	36	36	36
DPX and DPX-H 630 thermal magnetic	36 kA	400	-	-	-	-	-	-	-	-	-	-	25	T	T	T
		630	-	-	-	-	-	-	-	-	-	-	-	T	T	T
DPX and DPX-H 630 thermal magnetic	70 kA & 100 kA	400	-	-	-	-	-	-	-	-	-	-	25	36	36	36
		630	-	-	-	-	-	-	-	-	-	-	-	36	36	36
DPX and DPX-H 630 microprocessor release(1) S1, S2 & Sg	36 and 70 kA	400	-	-	-	-	-	-	-	-	-	-	6.3	8	12.5	16
		630	-	-	-	-	-	-	-	-	-	-	-	8	12.5	16
DPX and DPX-H 630 microprocessor release(2) S1, S2 & Sg	36 kA	400	-	-	-	-	-	-	-	-	-	-	25	T	T	T
		630	-	-	-	-	-	-	-	-	-	-	-	T	T	T
DPX and DPX-H 630 microprocessor release(2) S1, S2 & Sg	70 kA	400	-	-	-	-	-	-	-	-	-	-	25	36	36	36
		630	-	-	-	-	-	-	-	-	-	-	-	36	36	36
DPX 1250 thermal magnetic	50 and 70 kA	800	-	-	-	-	-	-	-	-	-	-	-	-	T	T
		1000	-	-	-	-	-	-	-	-	-	-	-	-	T	T
		1250	-	-	-	-	-	-	-	-	-	-	-	-	-	T
DPX and DPX-H 1600 microprocessor release(1) S1, S2	50 and 70 kA	800	-	-	-	-	-	-	-	-	-	-	-	-	12.5	16
		1250	-	-	-	-	-	-	-	-	-	-	-	-	-	16
		1600	-	-	-	-	-	-	-	-	-	-	-	-	-	-
DPX and DPX-H 1600 microprocessor release(2) S1, S2	50 and 70 kA	800	-	-	-	-	-	-	-	-	-	-	-	-	36	36
		1250	-	-	-	-	-	-	-	-	-	-	-	-	-	36
		1600	-	-	-	-	-	-	-	-	-	-	-	-	-	-

T = total selectivity, up to downstream circuit breaker breaking capacity, according to IEC 60947-2
(1) Microprocessor release, selector switch on "HIGH" - (2) Microprocessor release, selector switch on "LOW"

selectivity table microprocessor release DPX³ or DPX / DPX³, DPX (continued)

■ Limits of selectivity (average values kA at 400 V∿)

Downstream MCCB	Icu (kA)	In (A)	Upstream MCCB microprocessor release, selector switch on "LOW"													
			DPX³ 250 microprocessor release (25, 36, 50, 70 kA) with or without e.l.m.				DPX and DPX-H 250 microprocessor release S1, S2 (36 and 70 kA)				DPX and DPX-H 630 microprocessor release S1, S2 (36 and 70 kA) and 100 kA			DPX and DPX-H 1600 microprocessor release S1, S2 (50 and 70 kA)		
			40	100	160	250	40	100	160	250	250	400	630	800	1250	1600
DPX³ 160 with or without e.l.m.	16 kA	16, 25	-	1	1.6	2.5	3.5	3.5	3.5	3.5	6	6	6.3	T	T	T
		40, 63, 80	-	1	1.6	2.5	-	3.5	3.5	3.5	6	6	6.3	T	T	T
		100	-	-	1.6	2.5	-	-	3.5	3.5	6	6	6.3	T	T	T
		125	-	-	1.6	2.5	-	-	3.5	3.5	6	6	6.3	T	T	T
		160	-	-	-	2.5	-	-	-	3.5	6	6	6.3	T	T	T
	25 kA	16, 25	-	1	1.6	2.5	3.5	3.5	3.5	3.5	6	6	6.3	T	T	T
		40, 63, 80	-	1	1.6	2.5	-	3.5	3.5	3.5	6	6	6.3	T	T	T
		100	-	-	1.6	2.5	-	-	3.5	3.5	6	6	6.3	T	T	T
		125	-	-	1.6	2.5	-	-	3.5	3.5	6	6	6.3	T	T	T
		160	-	-	-	2.5	-	-	-	3.5	6	6	6.3	T	T	T
	36 kA	16, 25	-	1	1.6	2.5	3.5	3.5	3.5	3.5	6	6	6.3	T	T	T
		40, 63, 80	-	1	1.6	2.5	-	3.5	3.5	3.5	6	6	6.3	T	T	T
		100	-	-	1.6	2.5	-	-	3.5	3.5	6	6	6.3	T	T	T
		125	-	-	1.6	2.5	-	-	3.5	3.5	6	6	6.3	T	T	T
		160	-	-	-	2.5	-	-	-	3.5	6	6	6.3	T	T	T
	50 kA	16, 25	-	1	1.6	2.5	3.5	3.5	3.5	3.5	6	6	6.3	T	T	T
		40, 63, 80	-	1	1.6	2.5	-	3.5	3.5	3.5	6	6	6.3	T	T	T
		100	-	-	1.6	2.5	-	-	3.5	3.5	6	6	6.3	T	T	T
		125	-	-	1.6	2.5	-	-	3.5	3.5	6	6	6.3	T	T	T
		160	-	-	-	2.5	-	-	-	3.5	6	6	6.3	T	T	T
DPX³ 250 thermal-magnetic with or without e.l.m.	25 kA	100	-	-	1.6	2.5	-	-	3.5	3.5	6	6	6.3	T	T	T
		160	-	-	-	2.5	-	-	-	3.5	6	6	6.3	T	T	T
		200	-	-	-	2.5	-	-	-	3.5	6	6	6.3	T	T	T
		250	-	-	-	-	-	-	-	-	-	6	6.3	T	T	T
	36 kA	100	-	-	1.6	2.5	-	-	3.5	3.5	6	6	6.3	T	T	T
		160	-	-	-	2.5	-	-	-	3.5	6	6	6.3	T	T	T
		200	-	-	-	2.5	-	-	-	3.5	6	6	6.3	T	T	T
		250	-	-	-	-	-	-	-	-	-	6	6.3	T	T	T
	50 kA	100	-	-	1.6	2.5	-	-	3.5	3.5	6	6	6.3	T	T	T
		160	-	-	-	2.5	-	-	-	3.5	6	6	6.3	T	T	T
		200	-	-	-	2.5	-	-	-	3.5	6	6	6.3	T	T	T
		250	-	-	-	-	-	-	-	-	-	6	6.3	T	T	T
	70 kA	100	-	-	1.6	2.5	-	-	3.5	3.5	6	6	6.3	T	T	T
		160	-	-	-	2.5	-	-	-	3.5	6	6	6.3	T	T	T
		200	-	-	-	2.5	-	-	-	3.5	6	6	6.3	T	T	T
		250	-	-	-	-	-	-	-	-	-	6	6.3	T	T	T
DPX³ 250 microprocessor release(1) with or without e.l.m.	25 kA	40	-	1	1.6	2.5	-	1	1.6	2.5	8	8	8	T	T	T
		100	-	-	1.6	2.5	-	-	1.6	2.5	6	6	6.3	T	T	T
		160	-	-	-	2.5	-	-	-	2.5	6	6	6.3	T	T	T
		250	-	-	-	-	-	-	-	-	-	6	6.3	T	T	T
	36 kA	40	-	1	1.6	2.5	-	1	1.6	2.5	8	8	8	T	T	T
		100	-	-	1.6	2.5	-	-	1.6	2.5	6	6	6.3	T	T	T
		160	-	-	-	2.5	-	-	-	2.5	6	6	6.3	T	T	T
		250	-	-	-	-	-	-	-	-	-	6	6.3	T	T	T
	50 kA	40	-	1	1.6	2.5	-	1	1.6	2.5	8	8	8	T	T	T
		100	-	-	1.6	2.5	-	-	1.6	2.5	6	6	6.3	T	T	T
		160	-	-	-	2.5	-	-	-	2.5	6	6	6.3	T	T	T
		250	-	-	-	-	-	-	-	-	-	6	6.3	T	T	T
	70 kA	40	-	1	1.6	2.5	-	1	1.6	2.5	8	8	8	T	T	T
		100	-	-	1.6	2.5	-	-	1.6	2.5	6	6	6.3	T	T	T
		160	-	-	-	2.5	-	-	-	2.5	6	6	6.3	T	T	T
		250	-	-	-	-	-	-	-	-	-	6	6.3	T	T	T
DPX 250 thermal magnetic	36 kA	40	-	-	1.6	2.5	-	3.5	3.5	3.5	8	8	8	T	T	T
		63	-	-	1.6	2.5	-	3.5	3.5	3.5	8	8	8	T	T	T
		100	-	-	1.6	2.5	-	-	3.5	3.5	8	8	8	T	T	T
		160	-	-	-	2.5	-	-	-	3.5	6	6	6	T	T	T
		250	-	-	-	-	-	-	-	-	-	6	6	T	T	T
	70 kA and 100 kA	40	-	-	1.6	2.5	-	3.5	3.5	3.5	8	8	8	70	70	70
		63	-	-	1.6	2.5	-	3.5	3.5	3.5	8	8	8	70	70	70
		100	-	-	1.6	2.5	-	-	3.5	3.5	8	8	8	70	70	70
		160	-	-	-	2.5	-	-	-	3.5	6	6	6	70	70	70
		250	-	-	-	-	-	-	-	-	-	6	6	70	70	70
DPX 250 microprocessor release(1) S1, S2	36 kA	40	-	1	1.6	2.5	-	1	1.6	2.5	8	8	8	T	T	T
		100	-	-	1.6	2.5	-	-	1.6	2.5	6	6	6	T	T	T
		160	-	-	-	2.5	-	-	-	2.5	6	6	6	T	T	T
		250	-	-	-	-	-	-	-	-	-	6	6	T	T	T
	70 kA	40	-	1	1.6	2.5	-	1	1.6	2.5	8	8	8	70	70	70
		100	-	-	1.6	2.5	-	-	1.6	2.5	6	6	6	70	70	70
		160	-	-	-	2.5	-	-	-	2.5	6	6	6	70	70	70
		250	-	-	-	-	-	-	-	-	-	6	6	70	70	70
DPX and DPX-H 630 thermal magnetic	36 kA	400	-	-	-	-	-	-	-	-	-	-	6.3	20	20	T
		630	-	-	-	-	-	-	-	-	-	-	-	20	20	T
	70 kA and 100 kA	400	-	-	-	-	-	-	-	-	-	-	6.3	20	20	36
		630	-	-	-	-	-	-	-	-	-	-	-	20	20	36
DPX and DPX-H 630 microprocessor release(1) S1, S2, Sg	36 kA	400	-	-	-	-	-	-	-	-	-	-	5	20	20	T
		630	-	-	-	-	-	-	-	-	-	-	-	20	20	T
	70 kA	400	-	-	-	-	-	-	-	-	-	-	5	20	20	36
		630	-	-	-	-	-	-	-	-	-	-	-	20	20	36
DPX 1250 thermal magnetic	36, 70 kA and 100 kA	800	-	-	-	-	-	-	-	-	-	-	-	-	20	20
		1000	-	-	-	-	-	-	-	-	-	-	-	-	20	20
		1250	-	-	-	-	-	-	-	-	-	-	-	-	-	20
DPX and DPX-H 1600 microprocessor release(1) S1, S2, Sg	36, 70 kA and 100 kA	800	-	-	-	-	-	-	-	-	-	-	-	-	15	20
		1250	-	-	-	-	-	-	-	-	-	-	-	-	-	20
		1600	-	-	-	-	-	-	-	-	-	-	-	-	-	-

T = total selectivity, up to downstream circuit breaker breaking capacity, according to IEC 60947-2
(1) Microprocessor release, selector switch on "LOW"

selectivity table DMX³ / DPX³, DPX

■ Limits of selectivity (average values kA at 400 V∿)

Downstream MCCB	In	Upstream ACB																							
		DMX³ - N 2500 (50 kA)						DMX³ - H 2500 (65 kA)						DMX³ - L 2500 (100 kA)						DMX³-N 4000 (50 kA)		DMX³-H 4000 (65 kA)		DMX³-L 4000 (100 kA)	
		800	1000	1250	1600	2000	2500	800	1000	1250	1600	2000	2500	800	1000	1250	1600	2000	2500	3200	4000	3200	4000	3200	4000
DPX³ 160 (16, 25, 36, 50 kA) with or without e.l.m.	16	T	T	T	T	T	T	T	T	T	T	T	T	T	T	T	T	T	T	T	T	T	T	T	T
	25	T	T	T	T	T	T	T	T	T	T	T	T	T	T	T	T	T	T	T	T	T	T	T	T
	40	T	T	T	T	T	T	T	T	T	T	T	T	T	T	T	T	T	T	T	T	T	T	T	T
	63	T	T	T	T	T	T	T	T	T	T	T	T	T	T	T	T	T	T	T	T	T	T	T	T
	80	T	T	T	T	T	T	T	T	T	T	T	T	T	T	T	T	T	T	T	T	T	T	T	T
	100	T	T	T	T	T	T	T	T	T	T	T	T	T	T	T	T	T	T	T	T	T	T	T	T
	125	T	T	T	T	T	T	T	T	T	T	T	T	T	T	T	T	T	T	T	T	T	T	T	T
	160	T	T	T	T	T	88	T	T	T	T	T	T	T	T	T	T	T	T	T	T	T	T	T	T
DPX³ 250 thermal-magnetic (25, 36, 50 kA) with or without e.l.m.	100	T	T	T	T	T	T	T	T	T	T	T	T	T	T	T	T	T	T	T	T	T	T	T	T
	160	T	T	T	T	T	T	T	T	T	T	T	T	T	T	T	T	T	T	T	T	T	T	T	T
	200	T	T	T	T	T	T	T	T	T	T	T	T	T	T	T	T	T	T	T	T	T	T	T	T
	250	T	T	T	T	T	T	T	T	T	T	T	T	T	T	T	T	T	T	T	T	T	T	T	T
DPX³ 250 thermal-magnetic (70 kA) with or without e.l.m.	100	-	-	-	-	-	-	-	-	-	-	-	-	T	T	T	T	T	T	T	T	T	T	T	T
	160	-	-	-	-	-	-	-	-	-	-	-	-	T	T	T	T	T	T	T	T	T	T	T	T
	200	-	-	-	-	-	-	-	-	-	-	-	-	T	T	T	T	T	T	T	T	T	T	T	T
	250	-	-	-	-	-	-	-	-	-	-	-	-	T	T	T	T	T	T	T	T	T	T	T	T
DPX³ 250 microprocessor release(1) (25, 36, 50 kA) with or without e.l.m.	40	T	T	T	T	T	T	T	T	T	T	T	T	T	T	T	T	T	T	T	T	T	T	T	T
	100	T	T	T	T	T	T	T	T	T	T	T	T	T	T	T	T	T	T	T	T	T	T	T	T
	160	T	T	T	T	T	T	T	T	T	T	T	T	T	T	T	T	T	T	T	T	T	T	T	T
	200	T	T	T	T	T	T	T	T	T	T	T	T	T	T	T	T	T	T	T	T	T	T	T	T
	250	T	T	T	T	T	T	T	T	T	T	T	T	T	T	T	T	T	T	T	T	T	T	T	T
DPX³ 250 microprocessor release(1) (70 kA) with or without e.l.m.	40	-	-	-	-	-	-	-	-	-	-	-	-	T	T	T	T	T	T	T	T	T	T	T	T
	100	-	-	-	-	-	-	-	-	-	-	-	-	T	T	T	T	T	T	T	T	T	T	T	T
	160	-	-	-	-	-	-	-	-	-	-	-	-	T	T	T	T	T	T	T	T	T	T	T	T
	200	-	-	-	-	-	-	-	-	-	-	-	-	T	T	T	T	T	T	T	T	T	T	T	T
	250	-	-	-	-	-	-	-	-	-	-	-	-	T	T	T	T	T	T	T	T	T	T	T	T
DPX³ 250 microprocessor release(2) (25, 36, 50 kA) with or without e.l.m.	40	T	T	T	T	T	T	T	T	T	T	T	T	T	T	T	T	T	T	T	T	T	T	T	T
	100	T	T	T	T	T	T	T	T	T	T	T	T	T	T	T	T	T	T	T	T	T	T	T	T
	160	T	T	T	T	T	T	T	T	T	T	T	T	T	T	T	T	T	T	T	T	T	T	T	T
	200	T	T	T	T	T	T	T	T	T	T	T	T	T	T	T	T	T	T	T	T	T	T	T	T
	250	T	T	T	T	T	T	T	T	T	T	T	T	T	T	T	T	T	T	T	T	T	T	T	T
DPX³ 250 microprocessor release(2) (70 kA) with or without e.l.m.	40	-	-	-	-	-	-	-	-	-	-	-	-	T	T	T	T	T	T	T	T	T	T	T	T
	100	-	-	-	-	-	-	-	-	-	-	-	-	T	T	T	T	T	T	T	T	T	T	T	T
	160	-	-	-	-	-	-	-	-	-	-	-	-	T	T	T	T	T	T	T	T	T	T	T	T
	200	-	-	-	-	-	-	-	-	-	-	-	-	T	T	T	T	T	T	T	T	T	T	T	T
	250	-	-	-	-	-	-	-	-	-	-	-	-	T	T	T	T	T	T	T	T	T	T	T	T
DPX thermal magnetic (36 kA)	40	T	T	T	T	T	T	T	T	T	T	T	T	T	T	T	T	T	T	T	T	T	T	T	T
	63	T	T	T	T	T	T	T	T	T	T	T	T	T	T	T	T	T	T	T	T	T	T	T	T
	100	T	T	T	T	T	T	T	T	T	T	T	T	T	T	T	T	T	T	T	T	T	T	T	T
	160	T	T	T	T	T	T	T	T	T	T	T	T	T	T	T	T	T	T	T	T	T	T	T	T
	250	T	T	T	T	T	T	T	T	T	T	T	T	T	T	T	T	T	T	T	T	T	T	T	T
DPX-H 250 thermal magnetic (70 kA and 100 kA)	40	-	-	-	-	-	-	-	-	-	-	-	-	T	T	T	T	T	T	T	T	T	T	T	T
	63	-	-	-	-	-	-	-	-	-	-	-	-	T	T	T	T	T	T	T	T	T	T	T	T
	100	-	-	-	-	-	-	-	-	-	-	-	-	T	T	T	T	T	T	T	T	T	T	T	T
	160	-	-	-	-	-	-	-	-	-	-	-	-	T	T	T	T	T	T	T	T	T	T	T	T
	250	-	-	-	-	-	-	-	-	-	-	-	-	T	T	T	T	T	T	T	T	T	T	T	T
DPX 250 microprocessor release(1) S1 and S2 (36 kA)	40	T	T	T	T	T	T	T	T	T	T	T	T	T	T	T	T	T	T	T	T	T	T	T	T
	100	T	T	T	T	T	T	T	T	T	T	T	T	T	T	T	T	T	T	T	T	T	T	T	T
	160	T	T	T	T	T	T	T	T	T	T	T	T	T	T	T	T	T	T	T	T	T	T	T	T
	250	T	T	T	T	T	T	T	T	T	T	T	T	T	T	T	T	T	T	T	T	T	T	T	T
DPX 250 microprocessor release(2) S1 and S2 (36 kA)	40	T	T	T	T	T	T	T	T	T	T	T	T	T	T	T	T	T	T	T	T	T	T	T	T
	100	T	T	T	T	T	T	T	T	T	T	T	T	T	T	T	T	T	T	T	T	T	T	T	T
	160	T	T	T	T	T	T	T	T	T	T	T	T	T	T	T	T	T	T	T	T	T	T	T	T
	250	T	T	T	T	T	T	T	T	T	T	T	T	T	T	T	T	T	T	T	T	T	T	T	T
DPX-H 250 microprocessor release(1) S1 and S2 (70 kA)	40	-	-	-	-	-	-	-	-	-	-	-	-	T	T	T	T	T	T	T	T	T	T	T	T
	100	-	-	-	-	-	-	-	-	-	-	-	-	T	T	T	T	T	T	T	T	T	T	T	T
	160	-	-	-	-	-	-	-	-	-	-	-	-	T	T	T	T	T	T	T	T	T	T	T	T
	250	-	-	-	-	-	-	-	-	-	-	-	-	T	T	T	T	T	T	T	T	T	T	T	T
DPX-H 250 microprocessor release(2) S1 and S2 (70 kA)	40	-	-	-	-	-	-	-	-	-	-	-	-	T	T	T	T	T	T	T	T	T	T	T	T
	100	-	-	-	-	-	-	-	-	-	-	-	-	T	T	T	T	T	T	T	T	T	T	T	T
	160	-	-	-	-	-	-	-	-	-	-	-	-	T	T	T	T	T	T	T	T	T	T	T	T
	250	-	-	-	-	-	-	-	-	-	-	-	-	T	T	T	T	T	T	T	T	T	T	T	T
DPX 630 thermal magnetic (36 kA)	250	T	T	T	T	T	T	T	T	T	T	T	T	T	T	T	T	T	T	T	T	T	T	T	T
	320	T	T	T	T	T	T	T	T	T	T	T	T	T	T	T	T	T	T	T	T	T	T	T	T
	400	T	T	T	T	T	T	T	T	T	T	T	T	T	T	T	T	T	T	T	T	T	T	T	T
	500	T	T	T	T	T	T	T	T	T	T	T	T	T	T	T	T	T	T	T	T	T	T	T	T
	630	-	T	T	T	T	T	-	T	T	T	T	T	-	T	T	T	T	T	T	T	T	T	T	T
DPX-H 630 thermal magnetic (70 kA)	250	-	-	-	-	-	-	-	-	-	-	-	-	T	T	T	T	T	T	T	T	T	T	T	T
	320	-	-	-	-	-	-	-	-	-	-	-	-	T	T	T	T	T	T	T	T	T	T	T	T
	400	-	-	-	-	-	-	-	-	-	-	-	-	T	T	T	T	T	T	T	T	T	T	T	T
	500	-	-	-	-	-	-	-	-	-	-	-	-	T	T	T	T	T	T	T	T	T	T	T	T
	630	-	-	-	-	-	-	-	-	-	-	-	-	-	T	T	T	T	T	T	T	T	T	T	T
DPX microprocessor release(1) S1, S2 (36 kA) and Sg	400	T	T	T	T	T	T	T	T	T	T	T	T	T	T	T	T	T	T	T	T	T	T	T	T
	630	-	T	T	T	T	T	-	T	T	T	T	T	-	T	T	T	T	T	T	T	T	T	T	T
DPX microprocessor release(2) S1, S2 (36 kA) and Sg	400	T	T	T	T	T	T	T	T	T	T	T	T	T	T	T	T	T	T	T	T	T	T	T	T
	630	-	T	T	T	T	T	-	T	T	T	T	T	-	T	T	T	T	T	T	T	T	T	T	T
DPX-H 630 microprocessor release(1) S1, S2 (70 kA) and Sg	400	-	-	-	-	-	-	-	-	-	-	-	-	T	T	T	T	T	T	T	T	T	T	T	T
	630	-	-	-	-	-	-	-	-	-	-	-	-	-	T	T	T	T	T	T	T	T	T	T	T
DPX-H 630 microprocessor release(2) S1, S2 (70 kA) and Sg	400	-	-	-	-	-	-	-	-	-	-	-	-	T	T	T	T	T	T	T	T	T	T	T	T
	630	-	-	-	-	-	-	-	-	-	-	-	-	-	T	T	T	T	T	T	T	T	T	T	T
DPX thermal magnetic (50 kA)	800	-	-	T	T	T	T	-	-	T	T	T	T	-	-	T	T	T	T	T	T	T	T	T	T
	1000	-	-	-	T	T	T	-	-	-	T	T	T	-	-	-	T	T	T	T	T	T	T	T	T
	1250	-	-	-	-	T	T	-	-	-	-	T	T	-	-	-	-	T	T	T	T	T	T	T	T
DPX-H 1250 thermal magnetic (70 kA)	800	-	-	-	-	-	-	-	-	-	-	-	-	-	-	T	T	T	T	T	T	T	T	T	T
	1000	-	-	-	-	-	-	-	-	-	-	-	-	-	-	-	T	T	T	T	T	T	T	T	T
	1250	-	-	-	-	-	-	-	-	-	-	-	-	-	-	-	-	T	T	T	T	T	T	T	T
DPX and DPX-H 1600 microprocessor release(1) S1, S2 (50, 70 kA) and Sg	800	-	-	T	T	T	T	-	-	T	T	T	T	-	-	T	T	T	T	T	T	T	T	T	T
	1250	-	-	-	-	T	T	-	-	-	-	T	T	-	-	-	T	T	T	T	T	T	T	T	T
	1600	-	-	-	-	-	T	-	-	-	-	T	T	-	-	-	-	T	T	T	T	T	T	T	T
DPX and DPX-H 1600 microprocessor release(2) S1, S2 (50, 70 kA) and Sg	800	-	-	T	T	T	T	-	-	T	T	T	T	-	-	T	T	T	T	T	T	T	T	T	T
	1250	-	-	-	-	T	T	-	-	-	-	T	T	-	-	-	T	T	T	T	T	T	T	T	T
	1600	-	-	-	-	-	T	-	-	-	-	T	T	-	-	-	-	T	T	T	T	T	T	T	T

T = total selectivity, up to downstream circuit breaker breaking capacity, according to IEC 60947-2
(1) Microprocessor release, selector switch on "HIGH" - (2) Microprocessor release, selector switch on "LOW"

■ Technical data

Selectivity table between MCCB & MCB

Downstream MCB	In (A)	Upstream MCCB																								
		DPX³ 160 (16, 25, 36, 50 kA) with or without e.l.m.								DPX³ 250 (25, 36, 50, 70 kA) with or without e.l.m.				DPX³ 250 microprocessor release(1) (25, 36, 50, 70 kA) with or without e.l.m.				DPX³ 250 microprocessor release(2) (25, 36, 50, 70 kA) with or without e.l.m.				DPX and DPX-H 250 (36 and 70 kA)				
		16	25	40	63	80	100	125	160	100	160	200	250	40	100	160	250	40	100	160	250	40	63	100	160	250
Lexic 10 kA C curve	≤ 6	T	T	T	T	T	T	T	T	T	T	T	T	T	T	T	T	T	T	T	T	6	6	T	T	T
	10	7.5	7.5	7.5	7.5	7	7	T	T	T	T	T	T	T	T	T	T	T	T	T	T	5	5	T	T	T
	13	7.5	7.5	7.5	7.5	7	7	T	T	T	T	T	T	8	T	T	T	8	T	T	T	4	4	T	T	T
	16	-	6	6	6	6	6	T	T	T	T	T	T	6	T	T	T	6	T	T	T	4	4	T	T	T
	20	-	-	5	5	5	5	T	T	8	T	T	T	5	8	T	T	5	8	T	T	4	4	8	T	T
	25	-	-	4.5	4.5	4.5	4.5	8.5	8.5	6	T	T	T	4	6	T	T	4	6	T	T	3	3	6	T	T
	32	-	-	-	-	4	4	7	7	5	T	T	T	-	5	T	T	-	5	T	T	-	2	5	T	T
	40	-	-	-	-	3	3	6	6	5	T	T	T	-	5	T	T	-	5	T	T	-	-	5	T	T
	50	-	-	-	-	3	3	5.5	5.5	4	8	T	T	-	4	8	T	-	4	8	T	-	-	4	8	T
	63	-	-	-	-	3	3	5	5	4	8	T	T	-	4	8	T	-	4	8	T	-	-	4	8	T

T = total selectivity, up to downstream circuit breaker breaking capacity, according to IEC 60947-2
(1) Microprocessor release, selector switch on "HIGH" - (2) Microprocessor release, selector switch on "LOW"

Association & coordination of MCCBs & MCBs

Breaking capacity in 3-phase networks (+N) 400/415 V according to IEC 60947-2

Downstream MCB	In (A)	Upstream MCCB																											
		DPX³ 160 with or without e.l.m. 16 kA								DPX³ 160 with or without e.l.m. 25 kA								DPX³ 160 with or without e.l.m. 36 and 50 kA								DPX³ 250 with or without e.l.m. 25 kA			
		16 A	25 A	40 A	63 A	80 A	100 A	125 A	160 A	16 A	25 A	40 A	63 A	80 A	100 A	125 A	160 A	16 A	25 A	40 A	63 A	80 A	100 A	125 A	160 A	100	160	200	250
Lexic 10 kA C curve	≤ 6	16	16	16	16	16	16	16	16	25	25	25	25	25	25	25	25	25	25	25	25	25	25	25	25	25	25	25	25
	10	16	16	16	16	16	16	16	16	25	25	25	25	25	25	25	25	25	25	25	25	25	25	25	25	25	25	25	25
	13	16	16	16	16	16	16	16	16	25	25	25	25	25	25	25	25	25	25	25	25	25	25	25	25	25	25	25	25
	16		16	16	16	16	16	16	16		25	25	25	25	25	25	25		25	25	25	25	25	25	25	25	25	25	25
	20		16	16	16	16	16	16	16		25	25	25	25	25	25	25		25	25	25	25	25	25	25	25	25	25	25
	25			16	16	16	16	16	16			25	25	25	25	25	25			25	25	25	25	25	25	25	25	25	25
	32			16	16	16	16	16	16			25	25	25	25	25	25			25	25	25	25	25	25	25	25	25	25
	40				16	16	16	16	16				25	25	25	25	25				25	25	25	25	25	25	25	25	25
	50				16	16	16	16	16				25	25	25	25	25				25	25	25	25	25	25	25	25	25
	63					16	16	16	16					25	25	25	25					25	25	25	25	25	25	25	25

Breaking capacity in 3-phase networks +N 230/240 V according to IEC 60947-2

Breaking capacity for a downstream 1P+N or 2P MCB, backed-up by an upstream 2P or 4P MCB, in 230 V networks TT or TNS earthing systems

Downstream MCB	In (A)	Upstream MCCB																											
		DPX³ 160 with or without e.l.m. 16 kA								DPX³ 160 with or without e.l.m. 25 kA								DPX³ 160 with or without e.l.m. 36 and 50 kA								DPX³ 250 with or without e.l.m. 25 kA			
		16 A	25 A	40 A	63 A	80 A	100 A	125 A	160 A	16 A	25 A	40 A	63 A	80 A	100 A	125 A	160 A	16 A	25 A	40 A	63 A	80 A	100 A	125 A	160 A	100	160	200	250
Lexic 10 kA C curve	≤ 6	22	22	22	22	22	22	22	22	40	40	40	40	40	40	40	40	50	50	50	50	50	50	50	50	40	40	40	40
	10	22	22	22	22	22	22	22	22	40	40	40	40	40	40	40	40	50	50	50	50	50	50	50	50	40	40	40	40
	13	22	22	22	22	22	22	22	22	40	40	40	40	40	40	40	40	50	50	50	50	50	50	50	50	40	40	40	40
	16		22	22	22	22	22	22	22		40	40	40	40	40	40	40		50	50	50	50	50	50	50	40	40	40	40
	20		22	22	22	22	22	22	22		40	40	40	40	40	40	40		50	50	50	50	50	50	50	40	40	40	40
	25			22	22	22	22	22	22			40	40	40	40	40	40			50	50	50	50	50	50	40	40	40	40
	32			22	22	22	22	22	22			40	40	40	40	40	40			50	50	50	50	50	50	40	40	40	40
	40				22	22	22	22	22				40	40	40	40	40				50	50	50	50	50	40	40	40	40
	50				22	22	22	22	22				36	36	36	36	36				36	36	36	36	36	36	36	36	36
	63					22	22	22	22					30	30	30	30					30	30	30	30	30	30	30	30

DPX and DPX-H 250 microprocessor release[1] S1, S2 (36 and 70 kA)				DPX and DPX-H 250 microprocessor release[1] S1, S2 (36 and 70 kA)				DPX and DPX-H 630 (36 and 70 kA)					DPX and DPX-H 630 microprocessor release[1] S1, S2 (36 and 70 kA)			DPX and DPX-H 630 microprocessor release[2] S1, S2 (36 and 70 kA)			DPX and DPX-H 1250 (36 and 70 kA)			DPX and DPX-H 1600 microprocessor release[1] S1, S2 (50 and 70 kA)			DPX and DPX-H 1600 microprocessor release[2] S1, S2 (50 and 70 kA)		
40	100	160	250	40	100	160	250	250	320	400	500	630	250	400	630	250	400	630	800	1000	1250	800	1250	1600	800	1250	1600
T	T	T	T	T	T	T	T	T	T	T	T	T	T	T	T	T	T	T	T	T	T	T	T	T	T	T	T
T	T	T	T	T	T	T	T	T	T	T	T	T	T	T	T	T	T	T	T	T	T	T	T	T	T	T	T
8	T	T	T	8	T	T	T	T	T	T	T	T	T	T	T	T	T	T	T	T	T	T	T	T	T	T	T
6	T	T	T	6	T	T	T	T	T	T	T	T	T	T	T	T	T	T	T	T	T	T	T	T	T	T	T
5	8	T	T	5	8	T	T	T	T	T	T	T	T	T	T	T	T	T	T	T	T	T	T	T	T	T	T
4	6	T	T	4	6	T	T	T	T	T	T	T	T	T	T	T	T	T	T	T	T	T	T	T	T	T	T
-	5	T	T	-	5	T	T	T	T	T	T	T	T	T	T	T	T	T	T	T	T	T	T	T	T	T	T
-	5	T	T	-	5	T	T	T	T	T	T	T	T	T	T	T	T	T	T	T	T	T	T	T	T	T	T
-	4	8	T	-	4	8	T	T	T	T	T	T	T	T	T	T	T	T	T	T	T	T	T	T	T	T	T
-	4	8	T	-	4	8	T	T	T	T	T	T	T	T	T	T	T	T	T	T	T	T	T	T	T	T	T

Upstream MCCB

DPX³ 250 with or without e.l.m. 36, 50 and 70 kA				DPX³ 250 microprocessor release, LOW or HIGH with or without e.l.m. 25 kA				DPX³ 250 microprocessor release, LOW or HIGH with or without e.l.m. 36, 50 and 70 kA				DPX and DPX-H 250 36 and 70 kA					DPX and DPX-H 250 microprocessor release S1, S2 LOW or HIGH 36 and 70 kA				DPX and DPX-H 630 36 and 70 kA					DPX and DPX-H 630 microprocessor release S1, S2 LOW or HIGH 36 and 70 kA			DPX and DPX-H 1250 36 and 70 kA			DPX and DPX-H 1600 microprocessor release S1, S2 LOW or HIGH 50 and 70 kA		
100	160	200	250	40	100	160	250	40	100	160	250	40	63	100	160	250	40	100	160	250	250	320	400	500	630	250	400	630	800	1000	1250	800	1250	1600
25	25	25	25	25	25	25	25	25	25	25	25	25	25	25	25	25	25	25	25	25	25	25	25	25	25	25	25	25	25	25	25	25	25	25
25	25	25	25	25	25	25	25	25	25	25	25	25	25	25	25	25	25	25	25	25	25	25	25	25	25	25	25	25	25	25	25	25	25	25
25	25	25	25	25	25	25	25	25	25	25	25	25	25	25	25	25	25	25	25	25	25	25	25	25	25	25	25	25	25	25	25	25	25	25
25	25	25	25	25	25	25	25	25	25	25	25	25	25	25	25	25	25	25	25	25	25	25	25	25	25	25	25	25	25	25	25	25	25	25
25	25	25	25	25	25	25	25	25	25	25	25	25	25	25	25	25	25	25	25	25	25	25	25	25	25	25	25	25	25	25	25	25	25	25
25	25	25	25	25	25	25	25	25	25	25	25	25	25	25	25	25	25	25	25	25	25	25	25	25	25	25	25	25	20	20	20	20	20	20
25	25	25	25	25	25	25	25	25	25	25	25	25	25	25	25	25	25	25	25	25	25	25	25	25	25	25	25	25	15	15	15	15	15	15
25	25	25	25		25	25	25		25	25	25		25	25	25	20		25	25	20	20	20	20	20	20	20	20	20	15	15	15	15	15	15
25	25	25	25		25	25	25		25	25	25		25	25	20	15		25	20	15	15	15	15	15	15	15	15	15	12.5	12.5	12.5	12.5	12.5	12.5
25	25	25	25		25	25	25		25	25	25			20	15	15		20	15	15	15	15	15	15	15	15	15	15	12.5	12.5	12.5	12.5	12.5	12.5

Upstream MCCB

DPX³ 250 with or without e.l.m. 36, 50 and 70 kA				DPX³ 250 microprocessor release, LOW or HIGH with or without e.l.m. 25 kA				DPX³ 250 microprocessor release, LOW or HIGH with or without e.l.m. 36, 50 and 70 kA				DPX and DPX-H 250 36 and 70 kA					DPX and DPX-H 250 microprocessor release S1, S2 LOW or HIGH 36 and 70 kA				DPX and DPX-H 630 36 and 70 kA					DPX and DPX-H 630 microprocessor release S1, S2 LOW or HIGH 36 and 70 kA			DPX and DPX-H 1250 36 and 70 kA			DPX and DPX-H 1600 microprocessor release S1, S2 LOW or HIGH 50 and 70 kA		
100	160	200	250	40	100	160	250	40	100	160	250	40	63	100	160	250	40	100	160	250	250	320	400	500	630	250	400	630	800	1000	1250	800	1250	1600
50	50	50	50	40	40	40	40	50	50	50	50	50	50	50	50	50	50	50	50	50	50	50	50	50	50	50	50	50	50	50	50	50	50	50
50	50	50	50	40	40	40	40	50	50	50	50	50	50	50	50	50	50	50	50	50	50	50	50	50	50	50	50	50	50	50	50	50	50	50
50	50	50	50	40	40	40	40	50	50	50	50	50	50	50	50	50	50	50	50	50	50	50	50	50	50	50	50	50	50	50	50	50	50	50
50	50	50	50	40	40	40	40	50	50	50	50	50	50	50	50	50	50	50	50	50	50	50	50	50	50	50	50	50	50	50	50	50	50	50
50	50	50	50	40	40	40	40	50	50	50	50	50	50	50	50	50	50	50	50	50	50	50	50	50	50	50	50	50	50	50	50	50	50	50
50	50	50	50	40	40	40	40	50	50	50	50	50	50	50	50	50	50	50	50	50	50	50	50	50	50	50	50	50	50	50	50	50	50	50
50	50	50	50	40	40	40	40	50	50	50	50	50	50	50	50	50	50	50	50	50	50	50	50	50	50	50	50	50	50	50	50	50	50	50
50	50	50	50		40	40	40		50	50	50		50	50	50	50		50	50	50	50	50	50	50	50	50	50	50	50	50	50	50	50	50
36	36	36	36		36	36	36		36	36	36		45	45	36	30		45	36	30	30	30	30	30	30	30	30	30	25	25	25	25	25	25
30	30	30	30		30	30	30		30	30	30			45	30	30		45	30	30	30	30	30	30	30	30	30	30	25	25	25	25	25	25

legrand

Automatic transfer switch DPX

Maintaining continuity of supply becomes crucial especially at places where even a small delay in supply could result huge losses. The DPX range of MCCBs can be efficiently used as an Automatic Transfer Switch at places that require instant power switching. When connected with the microprocessor control box (line changeover unit) it gives you the flexibility to manage that automatic changeover between two supply lines effectively with remote controls.

AUTOMATIC

When the changeover is made automatically using motorised MCCB & Microprocessor Control Box.

When an operator organises the changeover from a remote location using motorised MCCBs and push button.

NON-AUTOMATIC

Manual - When an operator manually performs the changeover

DPX™
automatic transfer switch

6253 85

Pack	Cat. nos.	Ready-to-install ATS with FP MCCBs
1	6253 81	250A, T/M, 36kA
1	6253 82	250A, T/M, 70kA
1	6253 83	250A, Microprocessor 'S1', 70kA
1	6253 84	630A, T/M, 36kA
1	6253 85	630A, T/M, 70kA
1	6253 87	630A, Microprocessor 'S1', 36kA
1	6253 88	630A, Microprocessor 'S1', 70kA
1	6253 89	630A, Microprocessor 'S2', 36kA
1	6253 90	630A, Microprocessor 'S2', 70kA
1	6253 91	630A, Microprocessor 'Sg', 36kA
1	6253 92	630A, Microprocessor 'Sg', 70kA

DPX™
automatic transfer switch

■ Technical data

Handling continuity problems efficiently
Maintaining continuity of supply becomes crucial especially at places where even a small delay in supply could result in huge losses. The DPX range of MCCBs can be efficiently used as an Automatic Transfer Switch at places that require instant power switching. When connected with the microprocessor control box (line changeover unit) it gives you the flexibility to manage the automatic changeover between two supply lines effectively with remote controls.

■ Line changeover systems

Manual line changeover
The standard installation may be carried out by using manually operated DPX circuit breakers in fixed version, combined with mechanical interlocks. The mechanical interlock between DPX circuit breakers consists of a support plate on which two circuit breakers are arranged side-by-side. For particular versions (plug-in or draw-out version between two or more circuit breakers), special interlocks with factory pre-setting are available against order.

Motorised controlled line changeover
The electrically controlled line changeover may be carried out by using interlocked DPX circuit breakers equipped with remote controls.

Automatic line changeover
Automatic line changeover is the most advanced and flexible solution. This system is carried out by combining the components used for the electrically controlled line changeover with the microprocessor control box. This device allows to manage the automatic changeover between two supply sources with simple programming while safety requirements are never compromised.

DPX™
automatic transfer switch (continued)

■ Microprocessor control box

General characteristics
Microprocessor Control Box allows to manage the automatic changeover between two supply lines with maximum flexibility.
The microprocessor device with microprocessor is very compact
(144 x 144 mm).

Yet, it is able to perform a large number of functions such as :
- Quick acquisition of voltage levels
- Effective value of line voltage check
- Selection of operating mode (auto/man/test/off)
- Selection of voltage thresholds
- Selection of changeover time
- Display of selected parameters (voltage and time)
- Alarm display
- Starting signal to DG, can be given, in case of primary source failure
- Manual changeover line 1/ line 2
- Lockout of simultaneous switching over between lines
- Diagnostic test

■ Technical characteristics
- Setting of voltage thresholds on main and secondary line to check between 0.7 and 1Ue (280 - 400 V AC)
- Two models, depending on the supply voltages -230 V AC, 24 V DC
- Changeover time from main line to secondary line 0.5 to 30 s
- Main line resetting time 4 s
- 3-digit data display
- LED - signalling the operating state
- Outgoing relay changeover contacts rating (line circuit breakers control) 16 A 230 V in AC
- Alarm contact rating - 5 A 230 V in AC
- External connections with flexible cable max. 2.5 mm^2
- Operating temperature : 0 to 60^0 C
- Self-extinguishing polycarbonate casing with sealable transparent shield
- Front degree of protection IP 41 without shield, IP 54 with shield
- Flush-mounting version (144 x 144 mm)

Standard manual changeover switches

General characteristics

The manual changeover switches consist of separate parts that have to be assembled by the user or that may be factory assembled.

The changeover set for DPX circuit breakers consists of support plates equipped with a rocking mechanical interlock on which the circuit breakers in their different versions are fixed.

Standard mechanical interlocks

All fixed version DPX circuit breakers with front or rear terminals, except DPX 125 circuit breakers, may be equipped with standard mechanical interlock. They may be equipped with remote controls or with rotary handles.

Selection

Cat. nos.	Description
0261 93	Microprocessor Control Box - Standard
0261 94	Microprocessor Control Box - Advanced
0264 01	Mechanical interlock for two DPX 160 circuit breakers
0264 02	Mechanical interlock for two DPX 250 ER circuit breakers
0264 08	Mechanical interlock for two DPX 250 circuit breakers
0264 09	Mechanical interlock for two DPX 630 circuit breakers
0264 10	Mechanical interlock for two DPX 1250 or DPX 1600 circuit breakers (factory assembled only)

■ Ready to Install ATS

	Cat. nos.	Type	Breaking cap	Primary MCCB	Secondary MCCB
DPX 250 ATS	6253 81	Thermal - magnetic 250 Amps	36kA	0253 49	0253 49
	6253 82	Thermal - magnetic 250 Amps	70kA	0253 73	0253 73
	6253 83	Micropro-cessor 250 Amps	70kA	0254 23	0254 23

	Cat. nos.	Type	Breaking cap	Primary MCCB	Secondary MCCB
DPX 630 ATS	6253 84	Thermal - magnetic 630 Amps	36kA	0255 40	0255 40
	6253 85	Thermal - magnetic 630 Amps	70kA	0255 60	0255 60
	6253 87	Micropro-cessor S1 630 Amps	36kA	0256 07	0256 07
	6253 88	Micropro-cessor S1 630 Amps	70kA	0256 15	0256 15
	6253 89	Micropro-cessor S2 630 Amps	36kA	0256 32	0256 32
	6253 90	Micropro-cessor S2 630 Amps	70kA	0256 40	0256 40
	6253 91	Micropro-cessor Sg 630 Amps	36kA	0256 57	0256 57
	6253 92	Micropro-cessor Sg 630 Amps	70kA	0256 65	0256 65

Note : Arrangement to supply the recommended voltage to the microprocessor control box should be made in the panel.

DPX™
automatic transfer switch (continued)

■ Dimensions

Microprocessor control box

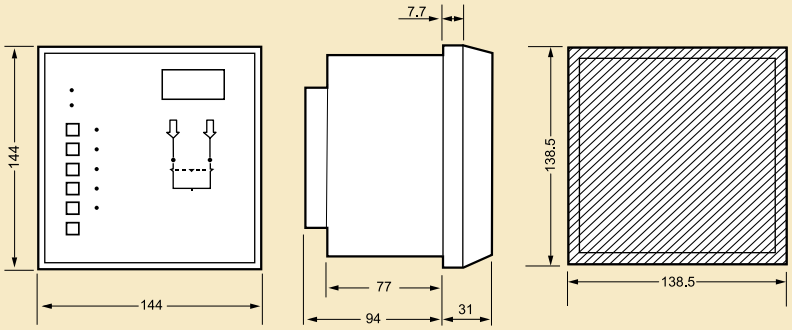

2 DPX 250 circuit breakers

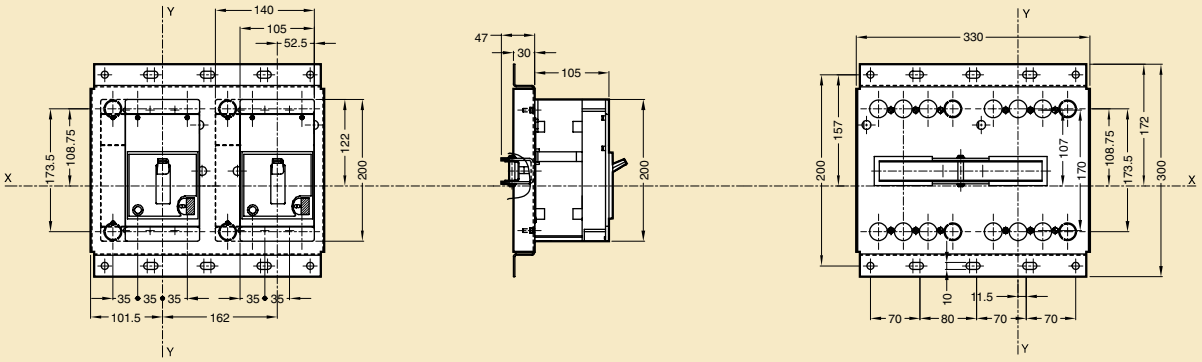

2 DPX 250 circuit breakers with remote control

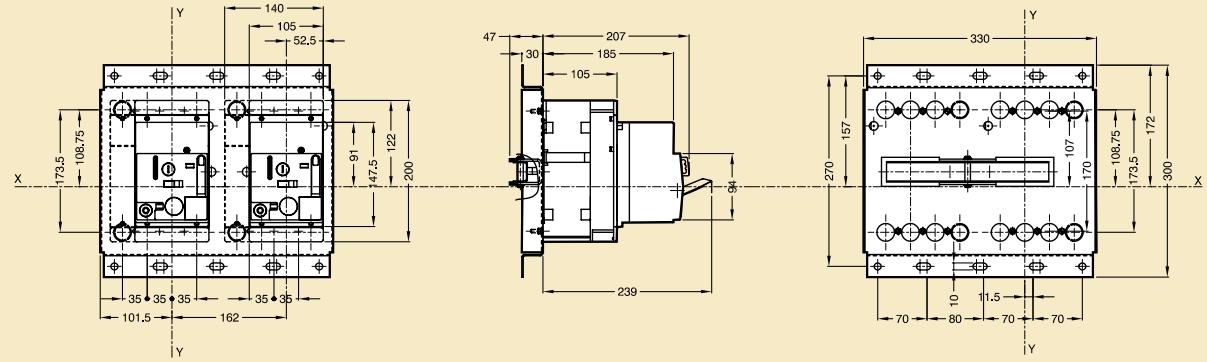

DPX 250 ready to install ATS

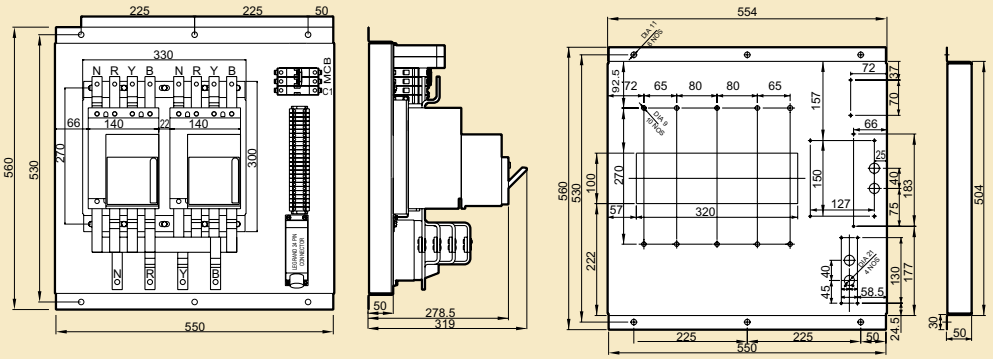

1 inch = 25.4 mm
Note : For all details on installation, please refer to the detailed instruction catalogue.

DPX™
automatic transfer switch (continued)

2 DPX 630 circuit breakers

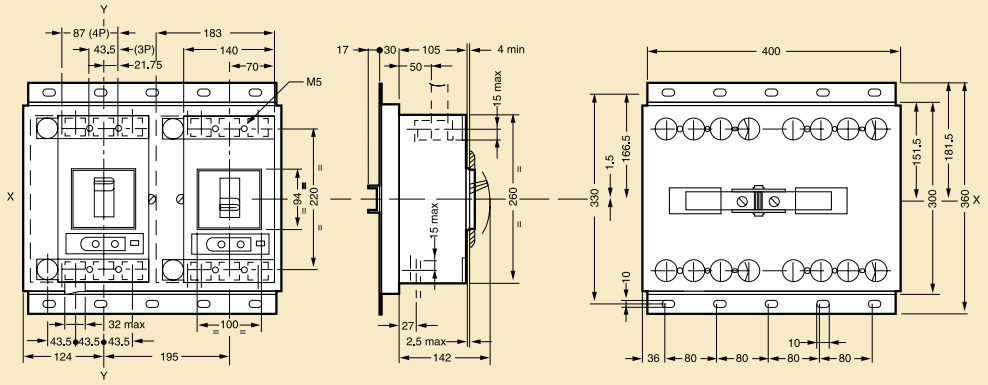

2 DPX 630 circuit breakers with remote control

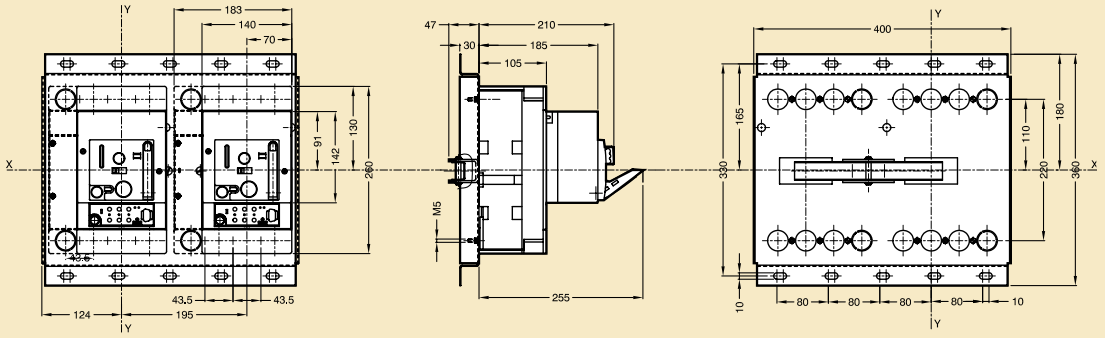

DPX 630 Ready to Install ATS

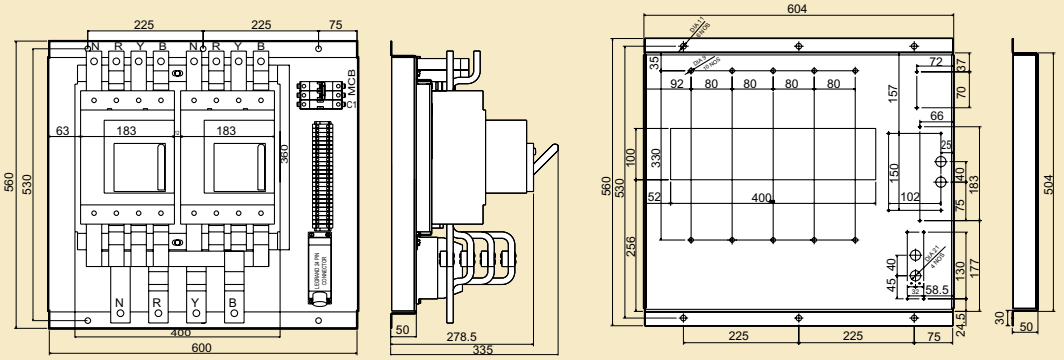

2 DPX 1250 or 2 DPX 1600 circuit breakers with remote control (factory assembled)

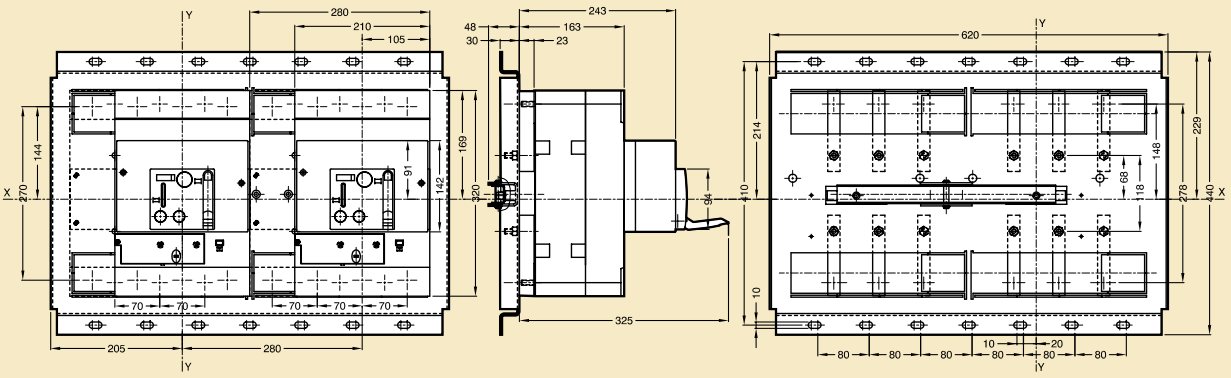

1 inch = 25.4 mm

Note : For all details on installation, please refer to the detailed instruction catalogue.

Cat.Nos	Page No	Pack
0040 00		
0048 68	28	**1**/48
0090 00		
0098 19	27	**1**/50
0250 00		
0253 28	26	1
29	-	1
30	-	1
31	-	1
32	-	1
40	-	1
41	-	1
42	-	1
45	-	1
46	-	1
47	-	1
48	-	1
49	-	1
52	-	1
53	-	1
54	-	1
55	-	1
56	-	1
64	-	1
65	-	1
66	-	1
69	-	1
70	-	1
71	-	1
72	-	1
73	-	1
80	-	1
81	-	1
82	-	1
89	-	1
90	-	1
91	-	1
98	39	1
99	-	1
0254 01	26	1
03	-	1
04	-	1
05	-	1
07	-	1
09	-	1
10	-	1
11	-	1
13	-	1
15	-	1
16	-	1
17	-	1
19	-	1
21	-	1
22	-	1
23	-	1
0254 40	27	1
0254 41	-	1
0254 42	-	1
0254 43	-	1
0254 45	-	1
0254 46	-	1
0254 47	-	1
0254 48	-	1

Cat.Nos	Page No	Pack
0254 50	27	1
51	-	1
52	-	1
53	-	1
55	-	1
56	-	1
57	-	1
58	-	1
0255 23	29	1
24	-	1
38	-	1
40	-	1
43	-	1
44	-	1
53	-	1
54	-	1
58	-	1
60	-	1
63	-	1
64	-	1
78	-	1
80	-	1
86	39	1
87	-	1
88	-	1
89	-	1
0256 02	29	1
03	-	1
06	-	1
07	-	1
10	-	1
11	-	1
14	-	1
15	-	1
27	-	1
28	-	1
31	-	1
32	-	1
35	-	1
36	-	1
39	-	1
40	-	1
43	-	1
44	-	1
47	-	1
48	-	1
52	30	1
53	-	1
56	-	1
57	-	1
60	-	1
61	-	1
64	-	1
65	-	1
0257 02	33	1
03	-	1
04	-	1
06[2]	-	1
07[2]	-	1
08[2]	-	1
10	-	1
11	-	1
12	-	1
14[2]	-	1
15[2]	-	1
16[2]	-	1

Cat.Nos	Page No	Pack
0257 26	34	1
27	-	1
28	-	1
30[2]	-	1
31[2]	-	1
32[2]	-	1
34	-	1
35	-	1
36	-	1
38[2]	-	1
39[2]	-	1
40[2]	-	1
51	-	1
52	-	1
53	-	1
55	-	1
56	-	1
57	-	1
59	-	1
60	-	1
61	-	1
63	-	1
64	-	1
65	-	1
94	39	1
95	-	1
96	-	1
97	-	1
98	-	1
99	-	1
0258 02	33	1
03	-	1
04	-	1
09[1]	-	1
10[1]	-	1
11[1]	-	1
16	-	1
17	-	1
18	-	1
23[1]	-	1
24[1]	-	1
25[1]	-	1
29	-	1
31	-	1
32	-	1
38	-	1
40	-	1
41	-	1
0260 00		
0260 51	27	1
53	-	1
54	-	1
55	-	1
57	-	1
60	30	1
61	-	1
63	-	1
64	-	1
65	-	1
67	-	1
88	37	**1**/24
92	-	**1**/12
93	-	**1**/10
94	-	1
95	-	1
96	-	1

Cat.Nos	Page No	Pack
0260 97	37	1
98	-	1
0261 19	35	1
23	-	1
24	-	1
25	-	1
27	-	1
28	-	1
30	28	1
34	-	1
35	37	**1**/2
36	-	**1**/2
37	-	**1**/3
40	31	**1**/2
44	-	**1**/2
45	37	**1**/4
54	35	1
58	-	**1**/5
59	28	**1**/5
59	31	**1**/5
59	35	**1**/5
60	36	**1**/5
64	-	**1**/5
65	-	**1**/5
66	-	**1**/5
67	-	**1**/5
68	-	**1**/5
75	-	**1**/5
80	-	1
81	-	1
82	-	1
83	-	1
84	-	1
85	-	**1**/5
86	-	1
90	-	**1**/4
91	-	**1**/4
93	-	1
94	-	1
97	-	**1**/3
0262 21	28	**1**/5
22	-	1
24	-	**1**/8
24	31	**1**/8
26	28	**1**/4
27	-	**1**/4
28	-	**1**/4
29	-	**1**/4
30	-	**1**/4
30	31	**1**/4
31	28	**1**/6
32	-	**1**/5
35	-	**1**/5
40	31	**1**/5
41	-	1
44		
45	31	1
46	-	**1**/6
47	-	**1**/3
50	-	**1**/5
51	-	**1**/3
60	35	**1**/4
61	-	1
64	-	1
65	-	1
66	-	**1**/3
67	-	**1**/5

Cat.Nos	Page No	Pack
0262 68	35	**1**/3
69	-	**1**/5
70	-	**1**/6
73	-	1
74	-	1
79	28	**1**/3
80	-	**1**/3
81	31	**1**/3
83	35	1
84	-	1
93	28	**1**/6
93	31	**1**/6
93	35	**1**/6
94	28	**1**/6
94	31	**1**/6
94	35	**1**/6
0263 31	28	**1**/4
32	-	**1**/4
43	27	**1**/6
50	31	1
51	-	1
52	-	1
68	-	**1**/6
80	35	1
81	-	1
82	-	1
83	-	1
99	27	**1**/5
99	31	**1**/5
0264 03	27	1
04	31	1
05	35	1
08	27	1
09	31	1
10	35	1
0265 27	28	**1**/4
28	-	**1**/4
29	27	1
30	-	1
31	-	1
32	-	1
33	-	1
34	-	1
35	-	1
36	-	1
37	-	1
38	-	1
39	-	1
45	-	1
46	-	1
47	-	1
50	31	1
51	-	1
52	-	1
53	-	1
53	-	1
54	-	1
55	-	1
56	-	1
57	-	1
58	-	1
59	-	1
60	-	1
66	-	1
67	-	1
68	-	1

Cat.Nos	Page No	Pack
0265 74	27	**1**/8
74	31	**1**/8
74	35	**1**/8
75	27	1
75	31	1
75	35	1
76	27	**1**/12
76	31	**1**/12
76	35	**1**/12
78	27	**1**/5
78	31	**1**/5
80	35	**1**/5
82	-	1
83	-	1
84	-	1
85	-	1
0460 00		
0466 23	37	1/20
4200 00		
4200 00	18	1
01	-	1
02	-	1
03	-	1
04	-	1
05	-	1
06	-	1
07	-	1
10	-	1
11	-	1
12	-	1
13	-	1
14	-	1
15	-	1
16	-	1
17	-	1
30	-	1
31	-	1
32	-	1
33	-	1
34	-	1
35	-	1
36	-	1
37	-	1
40	-	1
41	-	1
42	-	1
43	-	1
44	-	1
45	-	1
46	-	1
47	-	1
50	-	1
51	-	1
52	-	1
53	-	1
54	-	1
55	-	1
56	-	1
57	-	1
70	-	1
71	-	1
72	-	1
73	-	1
74	-	1
75	-	1

Bold catalogue numbers are products normally available with Legrand (India) stockists. **Cat. nos. that are not bold** - delivery within 4 - 8 weeks from the date of order.
Bold packing quantity is our mandatory packing. Orders to be placed by Legrand (India) stockists in multiples of the same.
Red catalogue numbers: New products

Cat.Nos	Page No	Pack
4200 76	18	1
77	-	1
80	-	1
81	-	1
82	-	1
83	-	1
84	-	1
85	-	1
86	-	1
87	-	1
90	-	1
91	-	1
92	-	1
93	-	1
94	-	1
95	-	1
96	-	1
97	-	1
4201 10	18	1
11	-	1
12	-	1
13	-	1
14	-	1
15	-	1
16	-	1
17	-	1
20	-	1
21	-	1
22	-	1
23	-	1
24	-	1
25	-	1
26	-	1
27	-	1
30	-	1
31	-	1
32	-	1
33	-	1
34	-	1
35	-	1
36	-	1
37	-	1
50	-	1
51	-	1
52	-	1
53	-	1
54	-	1
55	-	1
56	-	1
57	-	1
97	39	1
98	-	1
99	-	1
4202 05	20	1
07	-	1
08	-	1
09	-	1
15	-	1
17	-	1
18	-	1
19	-	1
25	-	1
27	-	1
28	-	1
29	-	1
35	-	1
37	-	1

Cat.Nos	Page No	Pack
4202 38	20	1
39	-	1
45	-	1
47	-	1
48	-	1
49	-	1
55	-	1
57	-	1
58	-	1
59	-	1
65	-	1
67	-	1
68	-	1
69	-	1
75	-	1
77	-	1
78	-	1
79	-	1
85	-	1
87	-	1
88	-	1
89	-	1
98	39	1
99	-	1
4203 00	39	1
02	21	1
05	-	1
07	-	1
09	-	1
12	-	1
15	-	1
17	-	1
19	-	1
22	-	1
25	-	1
27	-	1
29	-	1
32	-	1
35	-	1
37	-	1
39	-	1
42	-	1
45	-	1
47	-	1
49	-	1
52	-	1
55	-	1
57	-	1
59	-	1
62	-	1
65	-	1
67	-	1
69	-	1
72	-	1
75	-	1
77	-	1
79	-	1
82	-	1
85	-	1
87	-	1
89	-	1
4204 02	22	1
05	-	1
07	-	1
09	-	1
12	-	1
15	-	1

Cat.Nos	Page No	Pack
4204 17	22	1
19	-	1
22	-	1
25	-	1
27	-	1
29	-	1
32	-	1
35	-	1
37	-	1
39	-	1
42	-	1
45	-	1
47	-	1
49	-	1
52	-	1
55	-	1
57	-	1
59	-	1
62	-	1
65	-	1
67	-	1
69	-	1
72	-	1
75	-	1
77	-	1
79	-	1
82	-	1
85	-	1
87	-	1
89	-	1
4205 02	23	1
05	-	1
07	-	1
09	-	1
12	-	1
15	-	1
17	-	1
19	-	1
22	-	1
25	-	1
27	-	1
29	-	1
32	-	1
35	-	1
37	-	1
39	-	1
42	-	1
45	-	1
47	-	1
49	-	1
52	-	1
55	-	1
57	-	1
59	-	1
4206 05	20	1
07	-	1
08	-	1
09	-	1
15	-	1
17	-	1
18	-	1
19	-	1
25	-	1
27	-	1
28	-	1
29	-	1
35	21	1

Cat.Nos	Page No	Pack
4206 37	21	1
38	-	1
39	-	1
45	-	1
47	-	1
48	-	1
49	-	1
55	-	1
57	-	1
58	-	1
59	-	1
65	22	1
67	-	1
68	-	1
69	-	1
75	-	1
77	-	1
78	-	1
79	-	1
85	-	1
87	-	1
88	-	1
89	-	1
92	23	1
95	-	1
97	-	1
99	-	1
4207 02	23	1
05	-	1
07	-	1
09	-	1
10	38	1
11	-	1
12	-	1
13	-	1
14	-	1
15	-	1
16	-	1
17	-	1
18	-	1
19	-	1
20	-	1
21	-	1
22	-	1
23	-	1
24	-	1
25	-	1
26	-	1
27	-	1
28	-	1
29	-	1
4210 00	24	**1**/5
01	-	**1**/5
02	-	**1**/5
03	-	**1**/5
04	-	1
05	-	1
06	-	**1**/12
07	-	**1**/12
08	-	**1**/3
09	-	**1**/3
10	-	**1**/12
11	-	**1**/12
12	-	**1**/12
13	-	**1**/12
14	-	**1**/12
15	-	**1**/12

Cat.Nos	Page No	Pack
4210 16	24	**1**/12
17	-	**1**/12
18	-	**1**/12
19	-	**1**/12
20	-	**1**/12
21	-	**1**/12
22	-	**1**/12
23	-	**1**/12
24	-	**1**/12
25	-	**1**/12
26	19	**1**/2
27	-	**1**/2
28	-	**1**/12
29	-	**1**/12
30	23	**1**/8
31	-	**1**/8
36	19	**1**/6
37	-	**1**/6
38	23	**1**/6
39	-	**1**/6
40	19	1
41	-	1
42	23	1
43	-	1
44	19	**1**/5
44	23	**1**/5
45	19	**1**/10
45	23	**1**/10
46	19	**1**/10
46	23	**1**/10
47	19	**1**/10
47	23	**1**/10
48	24	**1**/8
49	-	**1**/12
50	19	**1**/4
51	-	**1**/5
52	23	**1**/5
53	-	**1**/3
54	19	**1**/4
55	-	**1**/5
56	23	**1**/5
57	-	**1**/3
58	24	1
59	-	**1**/2
60	-	1
61	-	**1**/4
62	-	**1**/12
63	-	**1**/12
64	-	**1**/12
65	-	**1**/12
66	-	**1**/12
67	-	**1**/12
68	19	**1**/8
69	23	**1**/8
70	19	**1**/2
70	23	**1**/2
71	19	**1**/5
72	23	**1**/16
73	19	**1**/5
74	23	**1**/16
75	24	**1**/6

6000 00

Cat.Nos	Page No	Pack
6079 10	40	1
11	-	1
12	-	1
13	-	1
14	-	1

Cat.Nos	Page No	Pack
6079 15	40	1
16	-	1
17	-	1
18	-	1
19	41	1
20	-	1
21	-	1
22	-	1
23	-	1
24	-	1
25	-	1
26	-	1
27	-	1
28	40	1
30	-	1
31	-	1
32	-	1
33	-	1
34	-	1
35	-	1
36	-	1
44	41	1
45	-	1

6250 00

Cat.Nos	Page No	Pack
6250 02	19	1
04	31	1
06	19	1
08	31	1
14	23	1
14	28	1
18	23	1
18	28	1
6253 81	71	1
82	-	1
83	-	1
84	-	1
85	-	1
87	-	1
88	-	1
89	-	1
90	-	1
91	-	1
92	-	1

OS0262 00

Cat.Nos	Page No	Pack
OS0262 25/3	28	1
OS0262 25/3	31	1
OS0262 25/3	35	1

In accordance with its policy of continuous improvement, the Company reserves the right to change specifications and designs without notice.

All illustrations, descriptions, dimensions and weights in this catalogue are for guidance and cannot be held binding on the Company.

Bold catalogue numbers are products normally available with Legrand (India) stockists. **Cat. nos. that are not bold** - delivery within 4 - 8 weeks from the date of order.
Bold packing quantity is our mandatory packing. Orders to be placed by Legrand (India) stockists in multiples of the same.
Red catalogue numbers: New products

NOTES

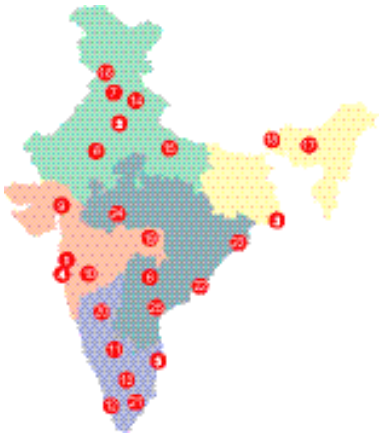

Head office

1. 61 & 62, 6th Floor, Kalpataru Square,
Off Andheri-Kurla Road, Andheri (E),
MUMBAI - 400 059.
Tel : (022) 3041 6200
Fax : (022) 3041 6201
Website : www.legrand.co.in

Regional sales offices

2. A-25, Mohan Co-operative
Industrial Estate, Mathura Road,
NEW DELHI - 110 044.
Tel : (011) 2699 0028 / 29 / 30, 3990 2200
Fax : (011) 2699 0047

3. Bhakta Towers, 2nd & 3rd Floor,
Plot No. KB 22, Salt Lake, Sector - 3
KOLKATA - 700 091.
Tel : (033) 4021 3535 / 36
Fax : (033) 4021 3537

4. 34, Kalpataru Square, 3rd Floor,
Off Andheri - Kurla Road,
Andheri (East),
MUMBAI - 400 059.
Tel : (022) 3385 6200
Fax : (022) 3385 6201

5. Gee Gee Universal,
8th Floor, Door No. 2, 18/1 & 18/2
McNichols Road, Chetput
CHENNAI – 600 031.
Tel : (044) 3024 7200, 2836 4165 / 67 / 68
Fax: (044) 2836 4169

6. 205-208, 2nd Floor, Block - II,
White House, Kundan Bagh, Begumpet,
HYDERABAD – 500 016.
Tel : (040) 2341 4398 / 67
Fax : (040) 6636 6974

Branch offices

7. SCO 1-2-3
Second floor, Sector 17B,
CHANDIGARH - 160 017.
Tel : (0172) 305 8631/ 32/33/34/35
Fax : (0172) 501 9008

8. 507-510, Vth Floor,
Soni Paris Point,
Jai Singh Highway,
Banipark,
JAIPUR - 302 016.
Telefax : (0141) 511 3129

9. 504, Sakar IV,
Opp. M. J. Library,
Ellis Bridge,
Ahmedabad - 380 006.
GUJARAT
Tel : (079) 2658 6561/2
Fax : (079) 2658 6563

10. 402, Swastik Chambers,
Near Ashwamegh Marriage Hall,
Behind HP Petrol Pump,
Off Karve Road,
Erandwane,
PUNE - 411 004.
Tel : (020) 6729 5600 / 601
Fax : (020) 6729 5604

11. IInd Floor,
Al-Latheef Building
2/1, Union Street,
Off. Infantry Road,
BANGALORE – 560 001.
Tel : (080) 2286 1081, 4113 3293 / 4
Fax : (080) 2286 1078

12. No. 36/2178,
Syda Building, 2nd Flr.,
Kaloor – Kadavanthra Road,
Kaloor,
KOCHI – 682 017.
Tel : (0484) 234 2921, 658 0921
Fax : (0484) 233 3921

13. B-15,
Thirumalai Towers,
IV-D, Fourth Floor,
723, Avanashi Road,
COIMBATORE – 641 018.
Tel : (0422) 650 2728, 222 3634 / 0283
Fax : (0422) 222 3164

Area offices

14. ABC Business Club 16,
Tagore Villa, Chakrata Road
DEHRADUN - 248 001. Uttaranchal.
Tel : (0135) 271 5189 / 248001

15. Cabin No.104/105, Trade Point,
Ground Floor, Saran Chamber 1,
5, Park Road, Hazratganj
LUCKNOW - 226 001.
Tel : (0522) 223 9044 / 7285
Fax : (0522) 223 9124

16. Cabin No. 9, Second Floor
Madhok Trade Centre,
Madhok Complex, Ferozpur Road
LUDHIANA - 141 001.
Tel/Fax No.: (0161) 277 0301 / 304

17. House No. 97, Ground Floor,
Rajgarh Main Road,
Opp. City Heart Nursing Home
GUWAHATI - 781 007.
Tel : (0361) 245 8498

18. 94, Udham Singh Sarani,
Ground Floor, Ashrampara,
SILIGURI - 734001
Tel : 94341 91635 / 98009 77780

19. Plot No.95, II Floor, Shreyash Heights,
Ramdas Peth, VIP Road,
NAGPUR - 440 010.
Tel : (0712) 224 1790
Fax : (0712) 222 0113

20. Prime Plaza, 2nd Floor,
1st Main, Girls High School Road,
Near PNB, Deshpande Nagar
HUBLI - 580029
Mobile Nos: 98807 64338 / 98807 64339

21. Aparna Towers, 1st Flr. 2/3,
Bypass Road
MADURAI – 625 010.
Telefax : (0452) 435 5945

22. 404, Eshwar Plaza,
Dwaraka Nagar, Main Road
VISHAKHAPATNAM – 530 020.
Telefax : (0891) 663 9363

23. Plot No. 359, Saheed Nagar, 2nd floor,
BHUBANESWAR - 751 007.
Tel : (0674) 254 0623

24. 204-205, Megapolis Square,
579, M G Road,
INDORE - 452 001.
Tel : (0731) 393 1650 / 51 / 52
Fax : (0731) 393 1653

25. MF-2, Datta's Lords House,
Jammi Chettu Street,
VIJAYAWADA – 520 010.
Telefax : (0866) 669 9393

DPX³/5000/07/2012

Technical assistance from Legrand

Telephonic technical assistance for selection of products, technical information, guidance, wiring diagrams and estimation is now made available to you at each Regional Office. Contact the Technical Officer of Legrand at the following telephone numbers

New Delhi : Tel.: (011) 2699 0028, 3990 2200
Kolkata : Tel.: (033) 4021 3535 / 36
Mumbai : Tel.: (022) 3385 6200
Chennai : Tel.: (044) 3024 7200, 2836 4165 / 67 / 68
Hyderabad : Tel.: (040) 2341 4398 / 67

For other places, contact the nearest
Regional / Branch /Area offices

customer.care@legrand.co.in

legrand®